LIFT STATIONS 3-3 ~~& 15-1~~ REPLACEMENTS

PINEHURST, NORTH CAROLINA

MAY 2024

NOTES

1) INSTALLATION SHALL BE COORDINATED WITH MCPU.
2) SUBMITTALS SHALL BE APPROVED BEFORE CONSTRUCTION BEGINS.
3) FOLLOW MOORE COUNTY SPECIFICATIONS FOUND ON THE WEB SITE AT: https://www.moorecountync.gov/public-works/engineering

PROJECT AREA

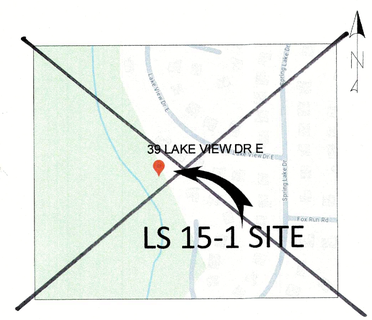

SCHEDULE OF DRAWINGS

G1	COVER SHEET
C1	LS 3-3 PLAN & PROFILE (EXISTING)
C2	LS 3-3 PLAN & PROFILE (PROPOSED)
C3	LS ASSEMBLY
~~C4~~	~~LS 15-1 PLAN & PROFILE (EXISTING)~~
~~C5~~	~~LS 15-1 PLAN & PROFILE (PROPOSED)~~
~~C6~~	~~LS ASSEMBLY~~
D1	DETAILS
E1	ELECTRICAL LEGEND AND ABBREVIATIONS
E2	ELECTRICAL SITE PLAN LS 3-3
E3	ELECTRICAL ONE LINE DIAGRAM LS 3-3
~~E4~~	~~ELECTRICAL SITE PLAN LS 15-1~~
~~E5~~	~~ELECTRICAL ONE LINE DIAGRAM LS 15-1~~
E6	ELECTRICAL DETAILS

LOCATION MAP

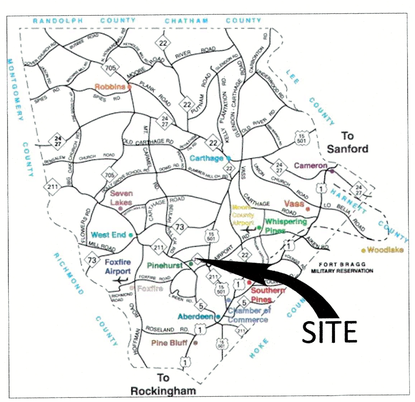

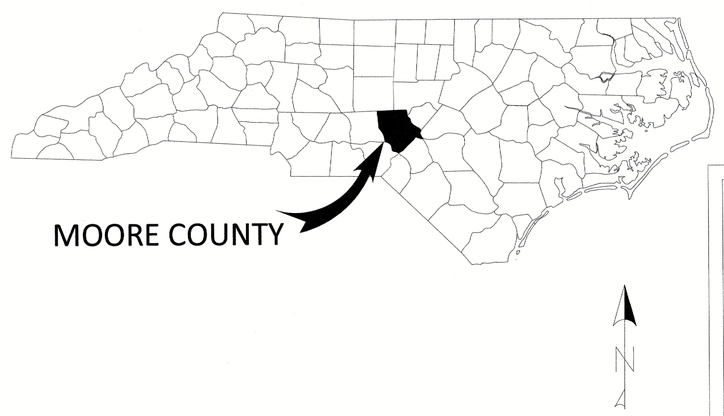

CALL BEFORE YOU DIG!
NC ONE CALL CENTER

811 or 1-800-632-4949
CALL THREE DAYS
BEFORE DIGGING

Approval Signatures

Building Inspection _____ Date _____
Fire Marshal _____ Date _____
Planning _____ Date _____
Public Works _____ Date _____
Environmental Health _____ Date _____

All Construction Methods and Materials shall be in accordance with Moore County and NCDOT Standards and Specifications. In the event of a conflict between standards, the more stringent shall govern unless a written waiver is issued by Moore County. Utility installations and other Public Facilities have been approved by Moore County and shall be so installed unless a change is authorized by prior written approval. Public Utility Easements shall be recorded prior to final acceptance, execution of the Deed of Dedication for Utilities and/or issuance of a Certificate of Occupancy by the County of Moore.

NORTH CAROLINA PROFESSIONAL SEAL 035619 ENGINEER JOHN PATINO

6-24-24

COUNTY OF MOORE 1784 STATE OF NORTH CAROLINA

MOORE COUNTY PUBLIC WORKS
www.moorecountync.gov
5227 HWY 15-501
P.O. BOX 1927
CARTHAGE, NC 28327
(910) 947-6315

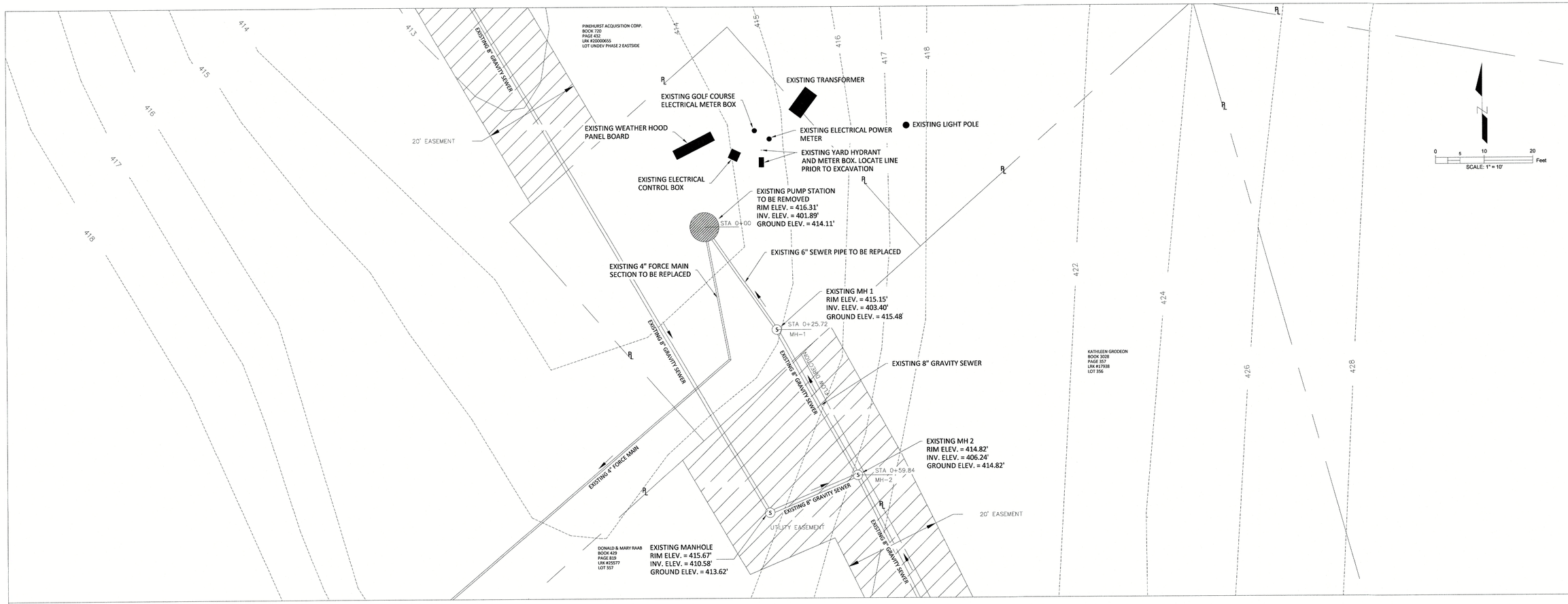

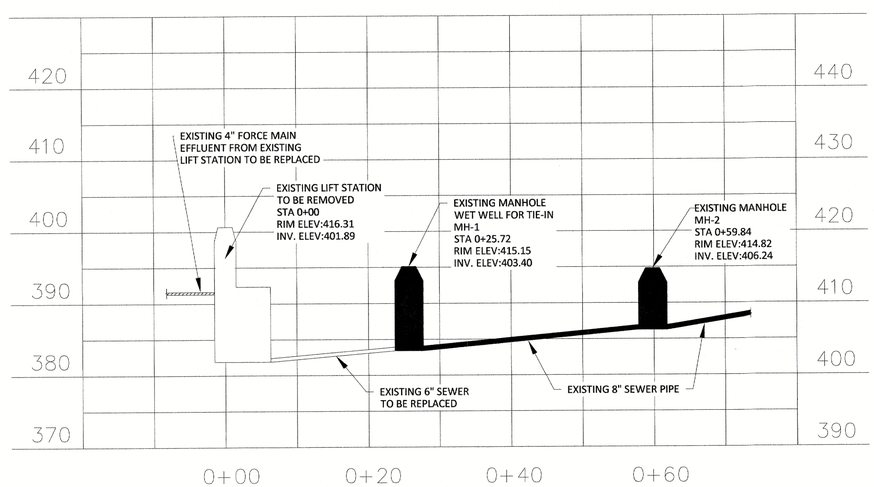

Existing Sewer Profile
Horizontal Scale: 1"=10'
Vertical Scale: 1"=10'

MOORE COUNTY PUBLIC WORKS
www.moorecountync.gov
5227 HWY 15-501
P.O. BOX 1927
CARTHAGE, NC 28327
(910) 947-6315

LIFT STATIONS 3-3 ~~& 15-1~~ REPLACEMENTS

PINEHURST, NC

DATE: MAY 2024
DESIGNED BY: CBP
CADD BY: DFH

LS 3-3
PLAN AND PROFILE
EXISTING & DEMOLITION

REVISIONS

NO.	DATE	BY	DESCRIPTION

SHEET

C1

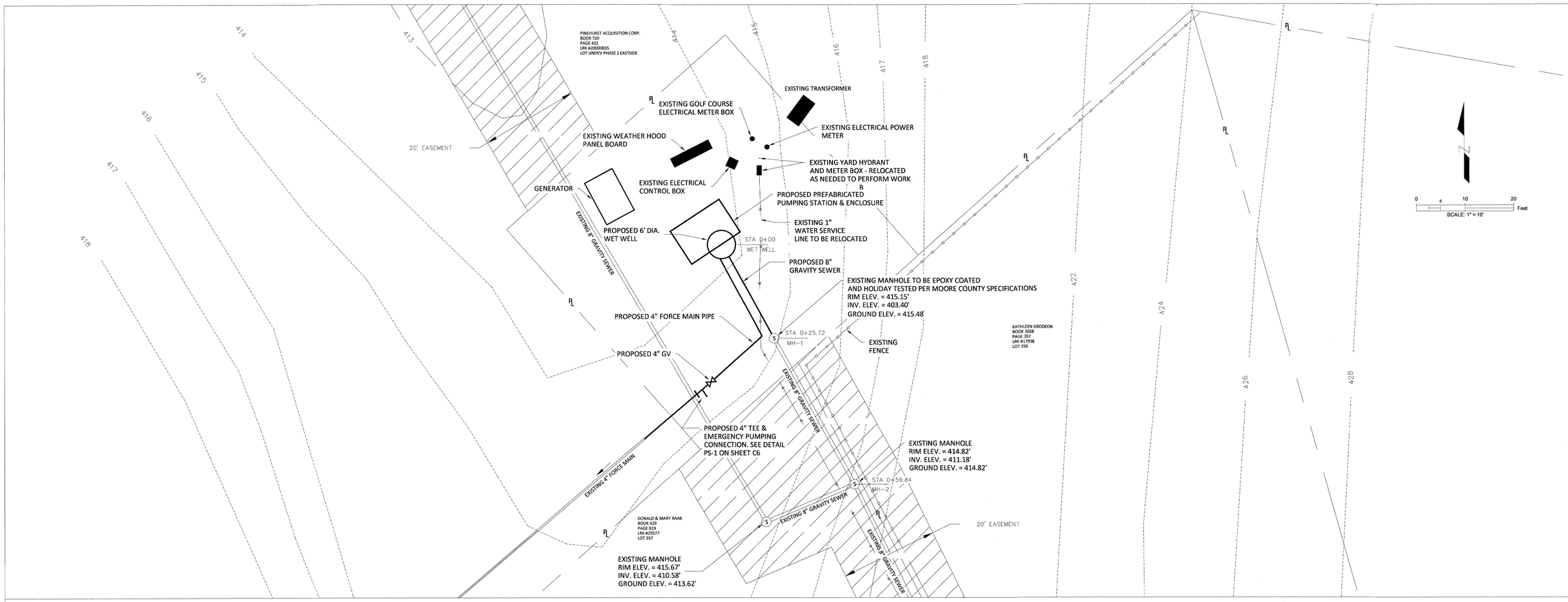

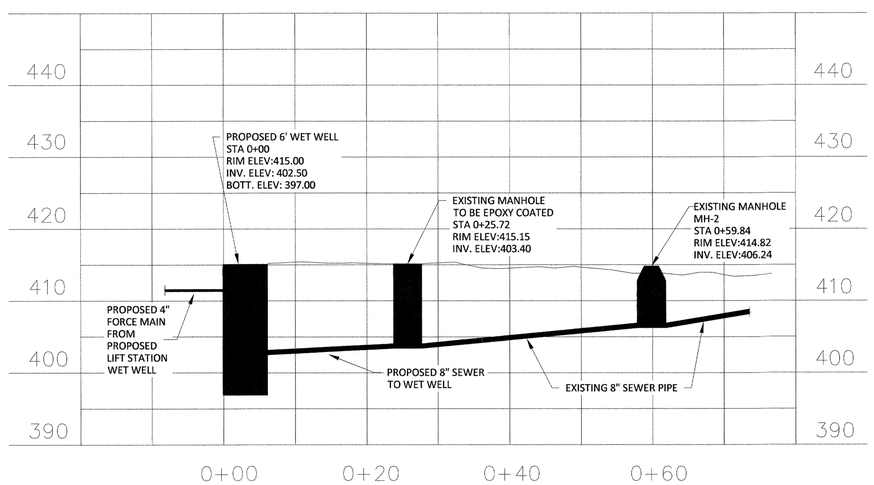

Proposed Sewer Profile
Horizontal Scale: 1"=10'
Vertical Scale: 1"=10'

MOORE COUNTY PUBLIC WORKS
www.moorecountync.gov
5227 HWY 15-501
P.O. BOX 1927
CARTHAGE, NC 28327
(910) 947-6315

LIFT STATIONS 3-3 ~~& 15-1~~ REPLACEMENTS
PINEHURST, NC

DATE: MAY 2024
DESIGNED BY: CBP
CADD BY: DFH

PUMP STATION 3-3
PLAN AND PROFILE
(PROPOSED)

REVISIONS

NO.	DATE	BY	DESCRIPTION

SHEET
C2

ITEM	DESCRIPTION	MATERIAL & SIZE	
1	PUMP	CAST IRON	VS3A-B
2	MOTOR	CAST IRON	
3	MOTOR STAND ASSEMBLY	STEEL	
4	CONCENTRIC INCREASER	CAST IRON	3" X 4"
5	CHECK VALVE	CAST IRON	4" X 4"
6	DISCHARGE PLUG VALVE	CAST IRON	4" 2-WAY
7	AIR RELEASE VALVE	CAST IRON	1 * (SHIPPED LOOSE)
8	STATION BASE ASSEMBLY	FRP/CONCRETE	
9	BELT GUARD ASSY	STEEL	
10	STATION ENCLOSURE ASS'Y	FRP	8'-0" X 12'-4"
11	EXHAUST FAN	STEEL	550 CFM
12	FLUORESCENT LIGHT FIXTURE	FRP	80 WATT
13	MOTOR CONTROL PANEL	STAINLESS STEEL	
14	INTAKE VENT ASSEMBLY	ALUMINUM	

* NOT SHOWN. LOCATED IN 3'-0" X 6'-6" ENTRY DOOR ASSEMBLY.

REVISIONS				
SYM.	DATE	RECORD	DR.	CK.
0	7/27/18	REMOVED (2) 3" X 4" CHECK VALVES.	MB	WC

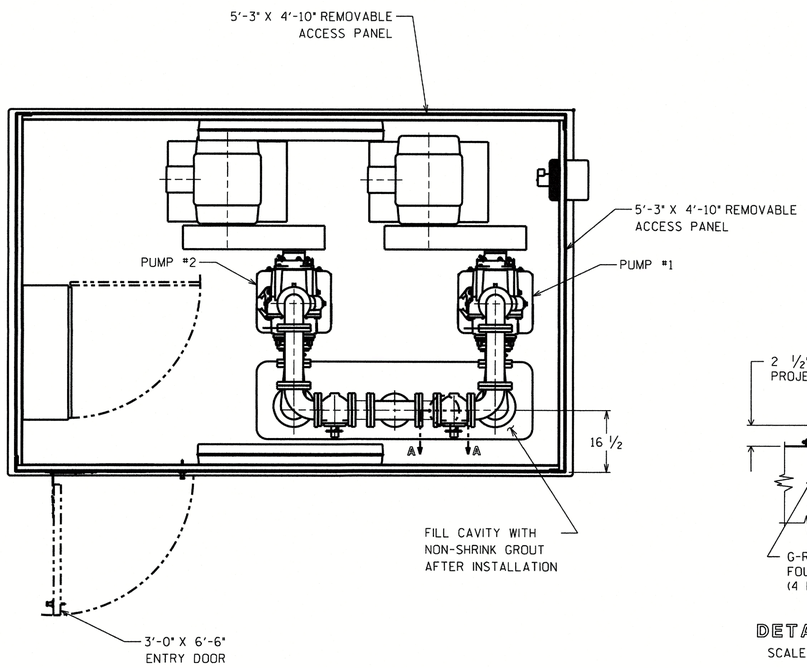

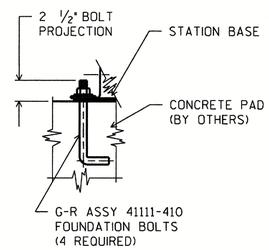

DETAIL B

SCALE: NONE

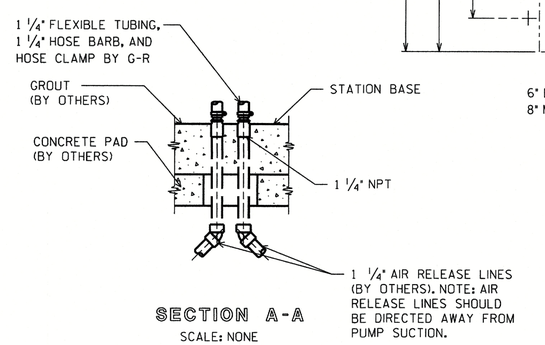

SECTION A-A

SCALE: NONE

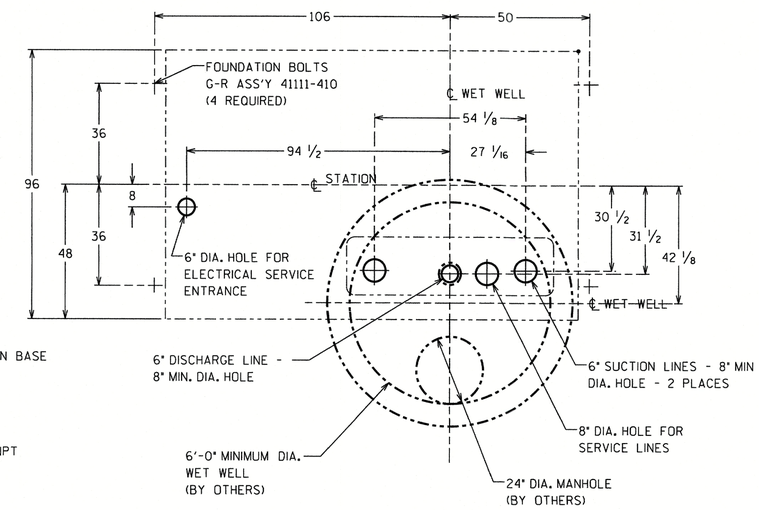

PLAN VIEW

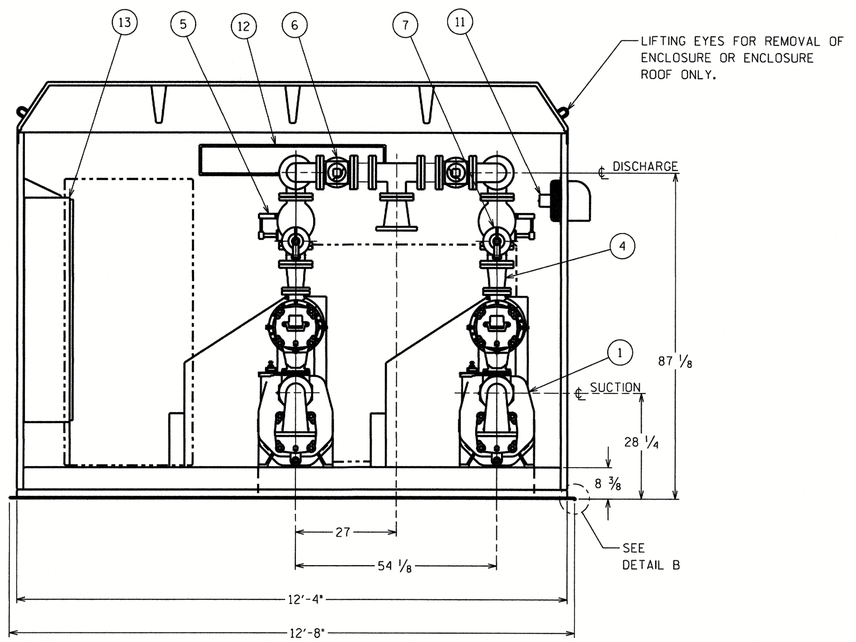

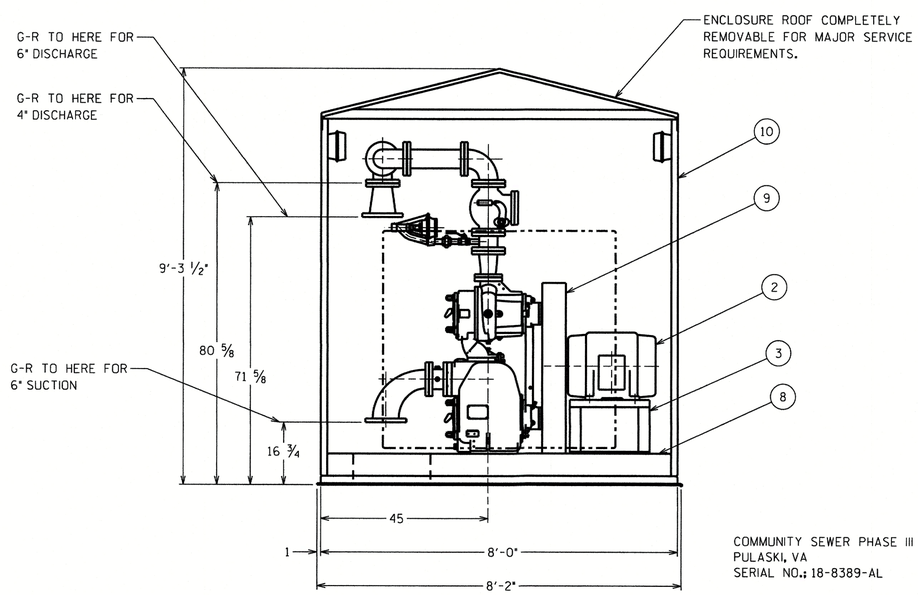

DUPLEX VS3A-B
6 X 4 X 6 WITH INCREASER

COMMUNITY SEWER PHASE III
PULASKI, VA
SERIAL NO.: 18-8389-AL

188389AL.s01.dgn

THE GORMAN-RUPP CO.
MANSFIELD, OHIO ST. THOMAS, ONTARIO

NAME: 8 X 12 ABOVE GROUND SEWAGE LIFT STATION ASSEMBLY

DRN.	CHK.	APP.	DATE
JMR	BM	BM	5-31-11

D | 45113-046 | SERIAL NO. 18-8389-AL

MOORE COUNTY PUBLIC WORKS
www.moorecountync.gov
5227 HWY 15-501
P.O. BOX 1927
CARTHAGE, NC 28327
(910) 947-6315

LIFT STATIONS 3-3 & ~~15-1~~
REPLACEMENTS
PINEHURST, NC

DATE: MAY 2024
DESIGNED BY: CBP
CADD BY: DFH

LS ASSEMBLY

REVISIONS			
NO.	DATE	BY	DESCRIPTION

SHEET
C3

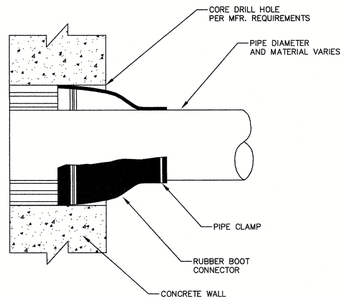

REVISED DATE	REVISED DESCRIPTION	MOORE COUNTY PUBLIC WORKS ENGINEERING DIVISION	RUBBER BOOT	STD NO. SS-15

FEBRUARY 2024

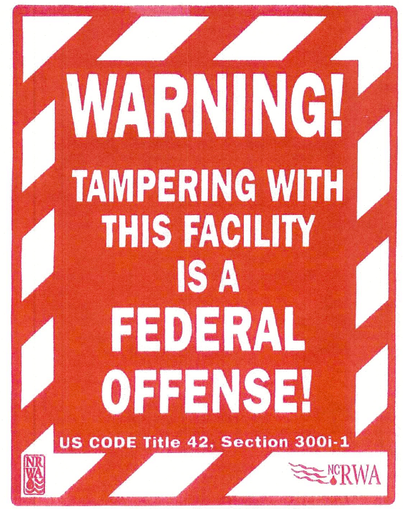

REVISED DATE	REVISED DESCRIPTION	MOORE COUNTY PUBLIC WORKS ENGINEERING DIVISION	SAFETY PLACARD	STD NO. PS-11

JUNE 2017

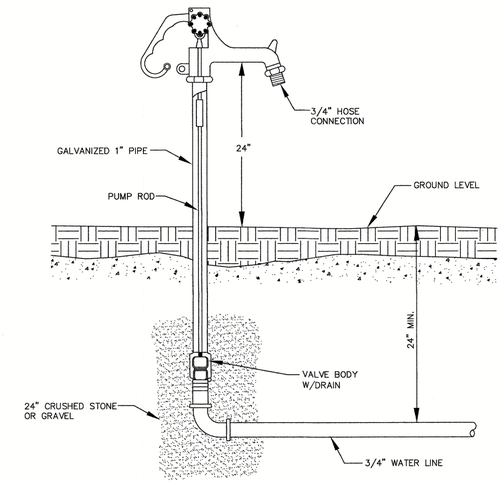

REVISED DATE	REVISED DESCRIPTION	MOORE COUNTY PUBLIC WORKS ENGINEERING DIVISION	SANITARY YARD HYDRANT	STD NO. PS-2

JUNE 2017

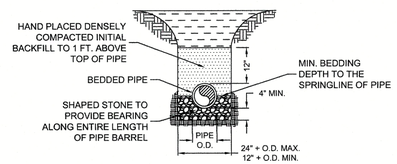

SANITARY SEWER DIP
0' - 3' DEPTH
NOT TO SCALE

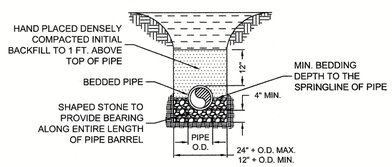

SANITARY SEWER
PVC/DIP 3' - 12' DEPTH
NOT TO SCALE

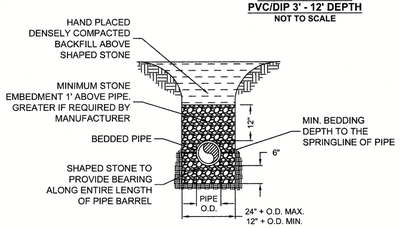

SANITARY SEWER
DIP >12' DEPTH
NOT TO SCALE

REVISED DATE	REVISED DESCRIPTION	MOORE COUNTY PUBLIC WORKS ENGINEERING DIVISION	PIPE INSTALLATION PVC & DIP	STD NO. SS-2

FEBRUARY 2024

NOTE;
SIGN TO BE 2' WIDE x 3' HIGH, BLACK LETTERING AND REFLECTIVE "FOR EMERGENCY" AND "(910) 947-6315" ARE 4" HIGH.
OTHER WORDS ARE 3" HIGH

REVISED DATE	REVISED DESCRIPTION	MOORE COUNTY PUBLIC WORKS ENGINEERING DIVISION	IDENTIFICATION SIGN	STD NO. PS-14

JUNE 2017

NOTES:
1. ALL MATERIALS AND INSTALLATION SHALL BE IN ACCORDANCE WITH MCPU STANDARDS.

2. ALL BELOW GRADE FITTINGS SHALL BE MECHANICAL JOINT.

3. ALL PIPE SHALL BE RESTRAINED JOINT D.I.P. CLASS 350

4. ALL PIPE AND FITTINGS TO BE LINED WITH PROTECTO 401 OR AN APPROVED EQUAL.

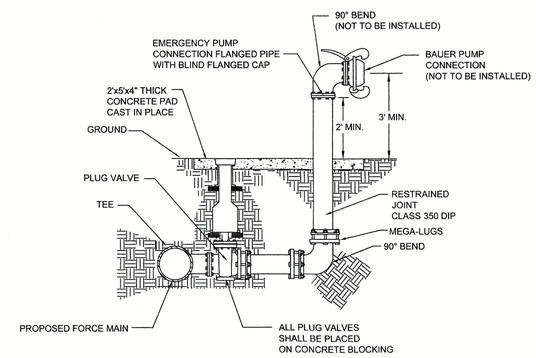

REVISED DATE	REVISED DESCRIPTION	MOORE COUNTY PUBLIC WORKS ENGINEERING DIVISION	EMERGENCY PUMP CONNECTION	STD NO. PS-1

JUNE 2017

MOORE COUNTY PUBLIC WORKS
www.moorecountync.gov
5227 HWY 15-501
P.O. BOX 1927
CARTHAGE, NC 28327
(910) 947-6315

LIFT STATIONS 3-3 ~~& 15-1~~
REPLACEMENTS
PINEHURST, NC

DATE: MAY 2024
DESIGNED BY: CBP
CADD BY: DFH

DETAILS

REVISIONS

NO.	DATE	BY	DESCRIPTION

SHEET
D1

THE SCALE BAR SHOWN BELOW MEASURES ONE INCH LONG ON THE ORIGINAL DRAWING.

STURGILL ENGINEERING P.A. C-1210
ONE SOUTH MAIN ST.
LEXINGTON, NC 27292
(336) 238-1249 PH.
(336) 236-6393 FAX

ONE – LINES

150 KVA
480V: 120/208V, 3PH, 60HZ — TRANSFORMER WITH PRIMARY AND SECONDARY VOLTAGE, KVA RATING AND CONNECTION INDICATED.

P6: 3#6, #6G, 1" (25) — ONE-LINE SHOWING CIRCUIT NUMBER P6 WITH THREE #6 AWG PHASE CONDUCTORS AND A #6 EQUIPMENT GROUND IN A 1" CONDUIT TO A 25 HP LOAD.

CIRCLE DENOTES ALL OR PART OF CONDUIT IS UNDERGROUND

3P-50 — LOW VOLTAGE AIR CIRCUIT BREAKER, 3 POLE, 50 AMPERE

3P-30 — THREE POLE DISCONNECT SWITCH WITH 30 AMP FUSES

S3 — SIZE 3 COMBINATION MAGNETIC MOTOR STARTER

PLANS

HEAVY LINES INDICATE NEW WORK

LIGHT LINES INDICATE EXISTING EQUIPMENT

CONDUIT EXPOSED

CONDUIT CONCEALED

CONDUIT TURNING UP, CONDUIT TURNING DOWN

LP-2 — TYPICAL HOMERUN TO BE ROUTED TO LIGHTING PANEL "LP" CIRCUIT NUMBER 2. SHORT DASH INDICATES PHASE CONDUCTOR, LONG DASH INDICATES NEUTRAL CONDUCTOR, CIRCULAR DASH INDICATES GROUND WIRE.

1 — FLUORESCENT LIGHTING FIXTURE, SEE LIGHTING SCHEDULE

3 — LIGHTING FIXTURE, SEE LIGHTING SCHEDULE

E — E — UNDERGROUND CONCRETE ENCASED DUCT BANK

EE — EE — UNDERGROUND DIRECT BURIED CONDUITS

GROUND CONDUCTOR

SINGLE POLE SWITCH

3 — THREE WAY SWITCH

M — MOTOR RATED SWITCH

WP — WEATHERPROOF SWITCH

2 — DUPLEX RECEPTACLE ON CIRCUIT LPA-2

GFI, WP — GROUND FAULT CIRCUIT INTERRUPTER WITH WEATHERPROOF IN-USE COVER

4 — SIMPLEX RECEPTACLE ON CIRCUIT LPA-4

3-PHASE RECEPTACLE

TELEPHONE OUTLET

JB — JUNCTION BOX

LIGHTING PANEL

MISCELLANEOUS PANEL

COMBINATION MOTOR STARTER

DISCONNECT SWITCH

GROUND ROD

GROUND CONNECTION

QUAD RECEPTACLE

GROUND ROD TEST WELL

ELECTRICAL LEGEND AND SYMBOLS

SCALE: NOT TO SCALE

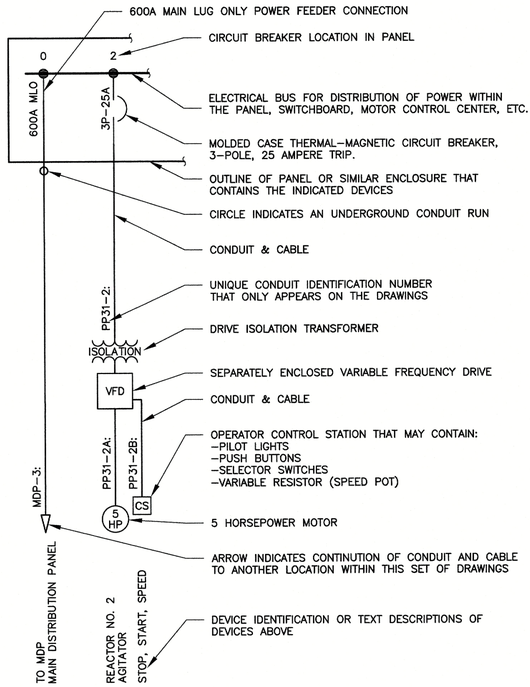

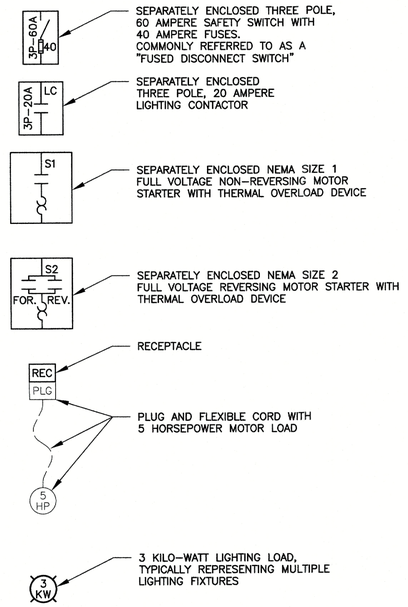

ELECTRICAL ONE-LINE DIAGRAM LEGEND

SCALE: NOT TO SCALE

A	AMPERE
AC	ALTERNATING CURRENT
A/C	AIR CONDITIONER
AFF	ABOVE FINISHED FLOOR
AGL	ABOVE GROUND LEVEL
AMP	AMPERE
ATS	AUTOMATIC TRANSFER SWITCH
AWG	AMERICAN WIRE GAUGE
BPS	BOOSTER PUMP STATION
C	CONDUIT
CB	CIRCUIT BREAKER
CFL	COMPACT FLOURESCENT
CP	CONTROL PANEL
CR	CONTROL RELAY
CS	CONTROL STATION
CT	CURRENT TRANSFORMER
DC	DIRECT CURRENT
DIA	DIAMETER
DM	DAMPER MOTOR
DS	DISCONNECT SWITCH
DSG	GENERATOR DISCONNECT SWITCH
DSU	UTILITY DISCONNECT SWITCH
EB	ELECTRONIC BALLAST
EC	EMPTY CONDUIT
E.C.	ELECTRICAL CONTRACTOR
EF	EXHAUST FAN
EL	ELEVATION
EHH	ELECTRICAL HAND HOLE
EWH	ELECTRIC WATER HEATER
EX.	EXISTING
EXP	EXPLOSION PROOF
FE	FLOW ELEMENT
FWE	FURNISHED WITH EQUIPMENT
G	GROUND
GEN	GENERATOR
GFCI	GROUND FAULT CIRCUIT INTERRUPTER
GFI	GROUND FAULT INTERRUPTER
GND	GROUND
HID	HIGH INTENSITY DISCHARGE (LIGHT)
HOA	HAND-OFF-AUTOMATIC
HP	HORSEPOWER
HVAC	HEATING, VENTILATION, & AIR COND.
HZ	HERTZ
JB	JUNCTION BOX
KVA	KILOVOLT-AMPERE
KW	KILOWATT
LAHJ	LOCAL AUTHORITY HAVING JURISDICTION
LE	LEVEL ELEMENT
LP	LIGHTING PANEL
LS	LEVEL SWITCH
LSH	LEVEL SWITCH – HIGH
LSL	LEVEL SWITCH – LOW
M	MAGNETIC MOTOR STARTER
M	MOTOR
MA	MILLIAMPERE
MAX	MAXIMUM
MCB	MAIN CIRCUIT BREAKER
MCC	MOTOR CONTROL CENTER
MCP	MOTOR CIRCUIT PROTECTOR
MDP	MAIN DISTRIBUTION PANEL
MIN	MINIMUM
MLO	MAIN LUG ONLY
MPC	MINI-POWER CENTER
MPZ	MINI-POWER ZONE
MTS	MANUAL TRANSFER SWITCH
MSH	MOTOR SPACE HEATER
MS	MOTOR STARTER
N	NEUTRAL
NEC	NATIONAL ELECTRICAL CODE
NEMA	NATIONAL ELECTRICAL MANUF. ASSOC.
OL	OVERLOAD (RELAY)
PB	PUSH BUTTON
PCP	PUMP CONTROL PANEL
PE	PHOTO-ELECTRIC CONTROL
PH	PHASE
PL	PILOT LIGHT
PLC	PROGRAMMABLE LOGIC CONTROLLER
PMR	POWER MONITOR RELAY
PP	POWER PANEL
PROP.	PROPOSED
PSCP	PUMP STATION CONTROL PANEL
R	RED
REQD	REQUIRED
RTU	REMOTE TELEMETRY UNIT
RVAT	REDUCED VOLTAGE AUTOTRANSFORMER
SA	SURGE ARRESTOR
SE	SERVICE ENTRANCE
SP	SUB-PANEL
SS	STAINLESS STEEL OR SELECTOR SWITCH
SSRV	SOLID STATE REDUCED VOLTAGE
SST	STAINLESS STEEL
SSW	SELECTOR SWITCH
T	THERMOSTAT
TS	TEMPERATURE SWITCH
TVSS	TRANSIENT VOLTAGE SURGE SUPPRESSOR
TYP	TYPICAL
UH	UNIT HEATER
UM	UTILITY METER
V	VOLTS
VAC	VOLTS ALTERNATING CURRENT
VFD	VARIABLE FREQUENCY DRIVE
W	WATTS OR WHITE
WP	WEATHERPROOF
XP	EXPLOSION PROOF
ZS	POSITION SWITCH
3-PH	THREE PHASE
4P	FOUR POLE
&	AND

2(3#350), #1N, 4"	TWO PARALLEL SETS OF 3-PHASE 350MCM CONDUCTORS, ONE #1AWG NEUTRAL CONDUCTOR, NO GROUNDING CONDUCTOR, IN ONE 4" CONDUIT.
3(1PR#18STP)	THREE – SINGLE PAIR, #18 AWG SHIELDED TWISTED PAIR CABLES
2(1TR#18STT)	TWO – SINGLE TRIADS, #18 AWG SHIELDED TWISTED TRIAD CABLES
3#16STP	THREE – #16 AWG SHIELDED TWISTED PAIR CABLES
3-7/C#14	THREE – SEVEN CONDUCTOR #14 AWG MULTICONDUCTOR CONTROL CABLES
2-RS485	TWO CABLES FOR RS485 COMMUNICATION

ELECTRICAL ABBREVIATIONS

SCALE: NOT TO SCALE

GENERAL NOTES:

1. CONTRACTOR SHALL PROVIDE ALL LABOR, MATERIALS, TOOLS, EQUIPMENT, PERMITS, AND OPERATIONS NECESSARY FOR THE PROPER EXECUTION AND COMPLETION OF ALL ELECTRICAL WORK INDICATED ON THE DRAWINGS.
2. ALL ELECTRICAL WORK AND MATERIALS SHALL COMPLY WITH THE NEC AND OTHER APPLICABLE FEDERAL, STATE (VOSH), AND LOCAL CODES, ALL ELECTRICAL EQUIPMENT SHALL BE UL OR SUITABLE THIRD PARTY LISTED OR LABELED.
3. ALL DISCONNECT SWITCHES, JUNCTION BOXES, MOTOR CONTROLLERS, AND OTHER EQUIPMENT REQUIRING ELECTRICAL POWER CONNECTION SHALL BE MARKED WITH VOLTAGE PRESENT, AS APPROPRIATE TO DESIGNATE 120, 208, 240, 277, 480 VOLTS AND SINGLE OR THREE PHASE, AS APPLICABLE.
4. CONTRACTOR SHALL BE RESPONSIBLE FOR ROUTING ALL CONDUITS. THIS INCLUDES CONDUITS ON ONE-LINES AND HOMERUNS ON PLANS. CABLE AND CONDUIT MAY NOT ALWAYS BE SHOWN ON ALL PLAN SHEETS. UNDERGROUND DUCT BANKS SHALL BE ROUTED TO AVOID INTERFERENCE WITH EXISTING EQUIPMENT.
5. CONTRACTOR SHALL VERIFY ALL EQUIPMENT LOCATIONS AND CONNECTION POINTS PRIOR TO INSTALLATION.
6. UNLESS OTHERWISE NOTED, MOUNT LIGHT SWITCHES AND CONVENIENCE RECEPTACLES 45" ABOVE FINISHED FLOOR. ALL CONVENIENCE RECEPTACLES SHALL HAVE GROUND FAULT PROTECTION.
7. (————) SOLID LINES INDICATE NEW WORK OR EQUIPMENT.
8. (————) SCREENED OR LIGHT WEIGHT LINES INDICATE EXISTING WORK OR EQUIPMENT.
9. (— —) DASHED LINES INDICATE FUTURE WORK OR EQUIPMENT.
10. THIS IS A GENERAL LEGEND SHEET. SOME SYMBOLS AND ABBREVIATIONS MAY NOT BE UTILIZED ON THIS SPECIFIC PROJECT.
11. HATCHED AREAS ▨ ON ONE-LINES AND ELEVATIONS INDICATE EQUIPMENT TO BE REMOVED BY THE CONTRACTOR.

MOORE COUNTY PUBLIC WORKS
www.moorecountync.gov
5227 HWY 15-501
P.O. BOX 1927
CARTHAGE, NC 28327
(910) 947-6315

NORTH CAROLINA PROFESSIONAL SEAL 16871 ENGINEER RANDALL W. STURGILL
4/25/2023

LIFT STATIONS 3-3 ~~& 15-1~~
REPLACEMENT
PINEHURST, NC

DATE: APRIL 2023
DESIGNED BY: RWS
CADD BY: RWS

ELECTRICAL LEGEND AND ABBREVIATIONS

NO.	DATE	BY	DESCRIPTION

REVISIONS

SHEET
E1

THE SCALE BAR SHOWN BELOW MEASURES ONE INCH LONG ON THE ORIGINAL DRAWING.

STURGILL ENGINEERING P.A. C-1210
ONE SOUTH MAIN ST.
LEXINGTON, NC 27292
(336) 238-1249 PH.
(336) 236-6393 FAX

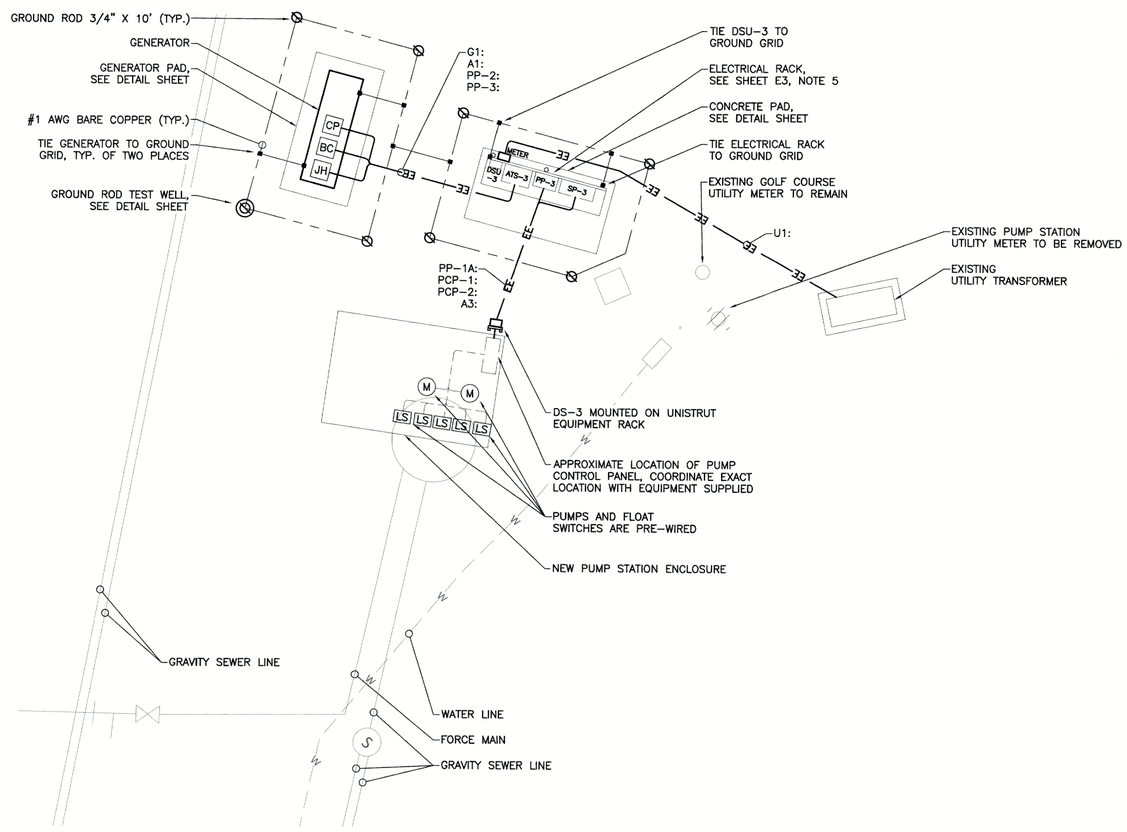

LIFT STATION 3-3 ELECTRICAL SITE PLAN

SCALE: 1" = 5' - 0"

NOTES:

1. SEE SHEET E0.01 FOR ELECTRICAL LEGEND, ABBREVIATIONS, AND NOTES.
2. INSTALL ALL ELECTRICAL EQUIPMENT AT LEAST 18" ABOVE GRADE.
3. CONTRACTOR SHALL COORDINATE NEW ELECTRICAL SERVICE WITH UTILITY.
4. WETWELL IS CLASSIFIED HAZARDOUS, CLASS 1, DIVISION 1, GROUP D BY THE NEC. ALL CONDUITS ENTERING THIS AREA SHALL BE PROVIDED WITH SUITABLE SEAL OFFS OR AIR GAPS.
5. REMOVE EXISTING DISCONNECT SWITCH, MANUAL TRANSFER SWITCH, PANELBOARD, PUMP CONTROL PANEL, AND SCADA PANEL FROM EXISTING ELECTRICAL EQUIPMENT RACK ALONG WITH ALL ASSOCIATED CABLE AND CONDUIT. EXISTING LIGHT FIXTURE AND LIGHT SWITCH TO REMAIN. SEE SHEET E3 FOR RACK MODIFICATIONS.

MOORE COUNTY PUBLIC WORKS
www.moorecountync.gov
5227 HWY 15-501
P.O. BOX 1927
CARTHAGE, NC 28327
(910) 947-6315

NORTH CAROLINA PROFESSIONAL ENGINEER SEAL 16871 RANDALL W. STURGILL
4/25/2023

LIFT STATIONS 3-3 ~~& 15-1~~ REPLACEMENT
PINEHURST, NC

DATE: APRIL 2023
DESIGNED BY: RWS
CADD BY: RWS

ELECTRICAL SITE PLAN
LIFT STATION 3-3

REVISIONS

NO.	DATE	BY	DESCRIPTION

SHEET
E2

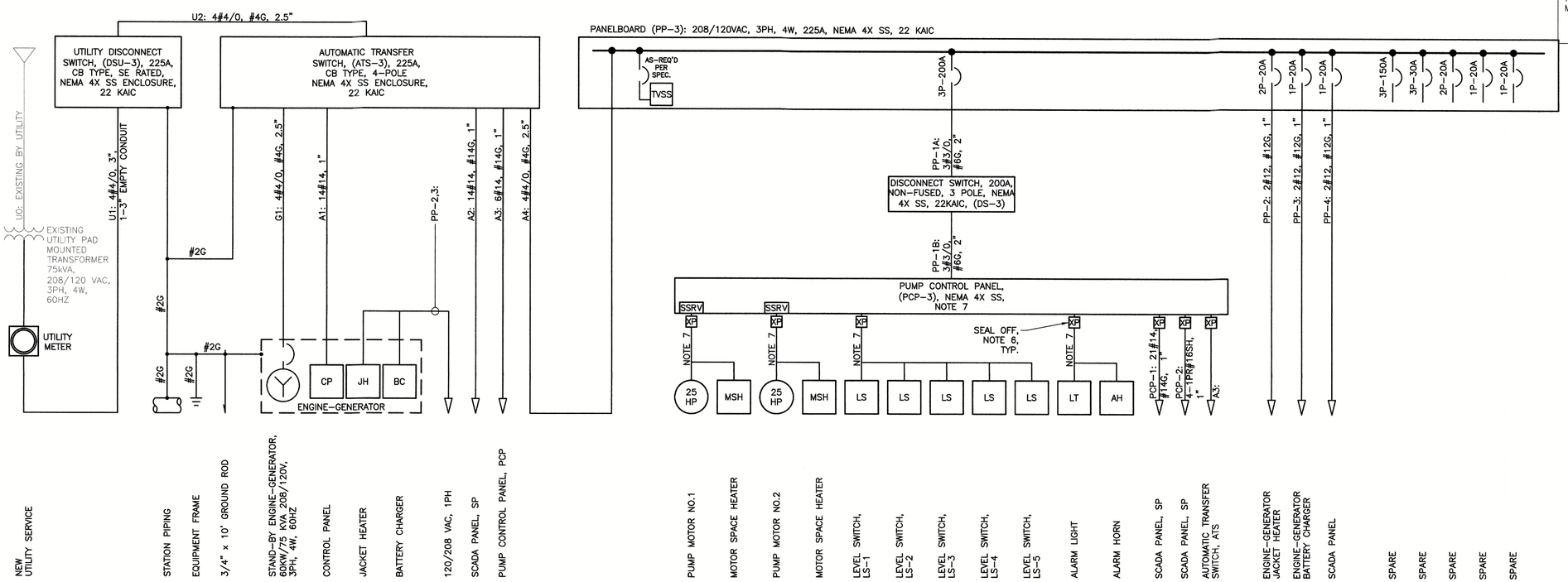

LIFT STATION 3-3 SYSTEM ONE-LINE DIAGRAM

NOT TO SCALE

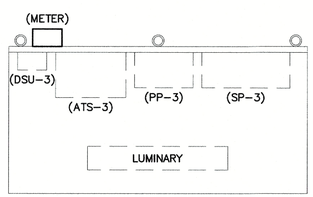

TOP VIEW

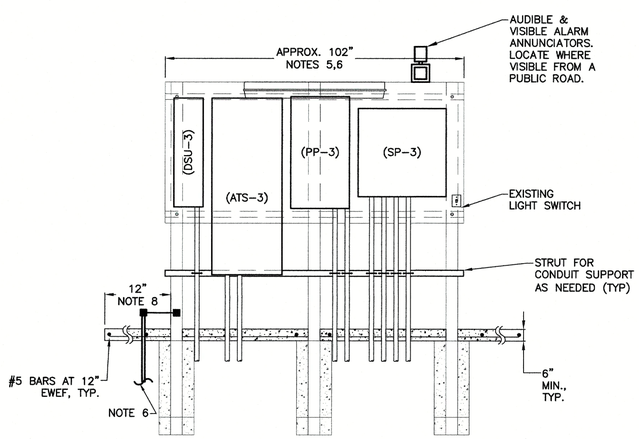

FRONT VIEW

LIFT STATION 3-3 ELECTRICAL RACK DETAIL

NOT TO SCALE

ELECTRICAL EQUIPMENT RACK NOTES:

1. ELECTRICAL RACK, HOOD, LUMINARY, AND LIGHT SWITCH ARE EXISTING.
2. MODIFY RACK AS NEEDED TO INSTALL NEW EQUIPMENT.
3. PROVIDE NEW 6" CONCRETE PAD. EXTEND CONCRETE PAD 12" PAST EACH SIDE AND THE BACK OF THE RACK. EXTEND CONCRETE PAD AT LEAST 60" PAST FRONT FACE OF RACK.
4. CORROSION-RESISTANT COATING OF THIXOTROPIC COAL TAR PAINT SHALL BE APPLIED TO ALL CONDUITS THAT TURN OUT OF CONCRETE, MASONRY, OR EARTH. THE COATING SHALL CONSIST OF A HEAVY COAT OF COAL TAR PAINT EXTENDING SIX INCHES ON EACH SIDE OF THE POINT OF TURN-OUT.
5. ZINC RICH PAINT SHALL BE FIELD APPLIED TO ALL SAW CUTS, PIPE THREADS, FASTNER HARDWARE, AND DAMAGED FINISHES OF GALVANIZED MATERIALS.
6. 5/8" DIA. x 10' GROUND ROD, QTY. AS REQD. BY NEC & LAHJ.

NOTES:

1. SEE SHEET E1 FOR LEGEND, ABBREVIATIONS, GENERAL NOTES AND DETAILS.
2. CONTRACTOR SHALL COORDINATE ROUTING OF CONDUITS WITH OWNER AND OTHER TRADES.
3. CONTRACTOR SHALL VERIFY ALL EQUIPMENT LOCATIONS AND CONNECTION POINTS PRIOR TO INSTALLATION.
4. CONTRACTOR SHALL PROVIDE ALL LABOR, MATERIALS, TOOLS, EQUIPMENT, PERMITS, AND OPERATIONS NECESSARY FOR THE PROPER EXECUTION AND COMPLETION OF ALL ELECTRICAL WORK INDICATED ON THE DRAWINGS.
5. ALL ELECTRICAL WORK AND MATERIALS SHALL COMPLY WITH THE NEC AND OTHER APPLICABLE FEDERAL, STATE, AND LOCAL CODES. ALL ELECTRICAL EQUIPMENT SHALL BE THIRD PARTY LISTED OR LABELED.
6. WETWELL IS CLASSIFIED HAZARDOUS, CLASS 1, DIVISION 1 GROUP D BY THE NEC. ALL CONDUITS ENTERING THIS AREA SHALL BE PROVIDED WITH SUITABLE SEALS.
7. PUMP CONTROL PANEL, PUMPS, LEVEL SWITCHES, ETC. PROVIDED AS PACKAGED PUMP STATION. ALL ELECTRICAL EQUIPMENT COMES PRE-WIRED.
8. SCADA PANEL FURNISHED BY OTHERS, INSTALLED BY CONTRACTOR. INCLUDE PROVISIONS ON RACK FOR 24" HIGH x 24" WIDE x 12" DEEP PANEL. COORDINATE EXACT REQUIREMENTS PRIOR TO BUILDING RACK.

THE SCALE BAR SHOWN BELOW MEASURES ONE INCH LONG ON THE ORIGINAL DRAWING.

STURGILL ENGINEERING P.A. C-1210
ONE SOUTH MAIN ST.
LEXINGTON, NC 27292
(336) 238-1249 PH.
(336) 236-6393 FAX

MOORE COUNTY PUBLIC WORKS
www.moorecountync.gov
5227 HWY 15-501
P.O. BOX 1927
CARTHAGE, NC 28327
(910) 947-6315

NORTH CAROLINA PROFESSIONAL SEAL 16871 ENGINEER RANDALL W. STURGILL
4/25/2023

LIFT STATIONS 3-3 ~~& 15-1~~ REPLACEMENT

PINEHURST, NC

DATE: APRIL 2023
DESIGNED BY: RWS
CADD BY: RWS

ELECTRICAL
ONE LINE DIAGRAM
LIFT STATION 3-3

REVISIONS			
NO.	DATE	BY	DESCRIPTION

SHEET

E3

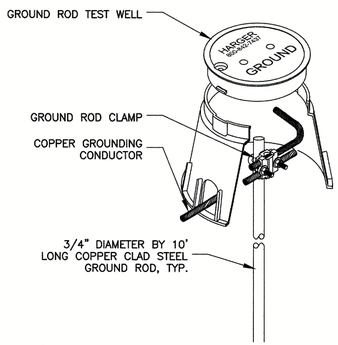

GROUND ROD TEST WELL DETAIL

SCALE: NOT TO SCALE

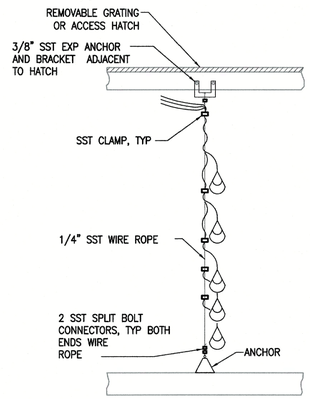

FLOAT SWITCH MOUNTING DETAIL

SCALE: NOT TO SCALE

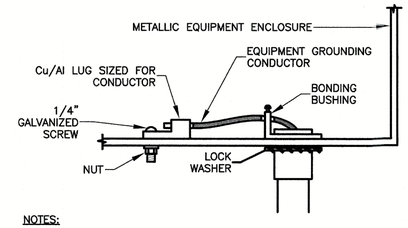

NOTES:

1. ONE CONDUCTOR PER LUG. USE MULTIPLE BARREL LUGS AS REQUIRED.
2. SCRAPE PAINT FROM UNDER LUG TO ASSURE METAL CONTACT.

TYPICAL EQUIPMENT GROUNDING DETAIL

SCALE: NOT TO SCALE

THE SCALE BAR SHOWN BELOW MEASURES ONE INCH LONG ON THE ORIGINAL DRAWING.

PANEL "A" 120/208V, 3ø, 4W, 225A
FED FROM MDP-21
INSTALLED 12/23/02

DISC AHU#1 120/208V, 3ø, 4W, 100A
FED FROM PP-2,4,6
INSTALLED 12/23/02

PANEL "AA" 120/208V, 3ø, 4W, 225A
SUB-FED FROM PNL "A"
INSTALLED 12/23/02

NOTE:
1. SUBMIT COMPLETE LIST OF PROPOSED NAMEPLATES TO ARCHITECT/ENGINEER FOR APPROVAL PRIOR TO FABRICATION.

TYPICAL NAMEPLATE DETAIL

SCALE: NOT TO SCALE

STURGILL ENGINEERING P.A. C-1210
ONE SOUTH MAIN ST.
LEXINGTON, NC 27292
(336) 238-1249 PH.
(336) 236-6393 FAX

MOORE COUNTY PUBLIC WORKS
www.moorecountync.gov
5227 HWY 15-501
P.O. BOX 1927
CARTHAGE, NC 28327
(910) 947-6315

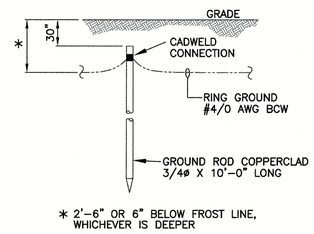

* 2'-6" OR 6" BELOW FROST LINE, WHICHEVER IS DEEPER

GROUND ROD DETAIL

SCALE: NOT TO SCALE

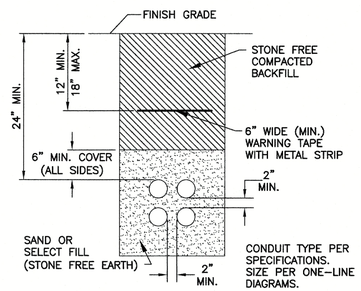

DIRECT BURIED CONDUIT DETAIL

SCALE: NOT TO SCALE

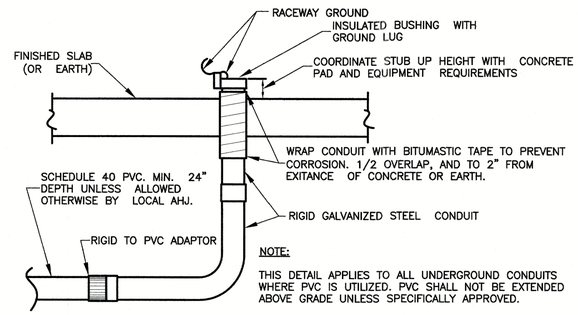

NOTE:

THIS DETAIL APPLIES TO ALL UNDERGROUND CONDUITS WHERE PVC IS UTILIZED. PVC SHALL NOT BE EXTENDED ABOVE GRADE UNLESS SPECIFICALLY APPROVED.

TYPICAL CONDUIT STUB UP DETAIL

SCALE: NOT TO SCALE

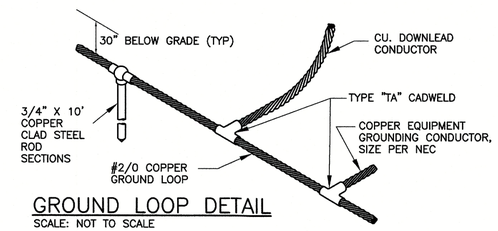

GROUND LOOP DETAIL

SCALE: NOT TO SCALE

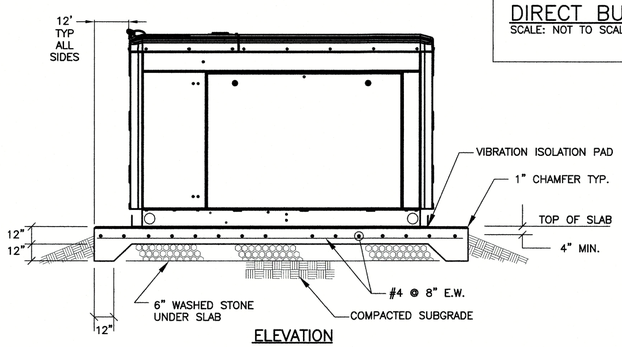

ELEVATION

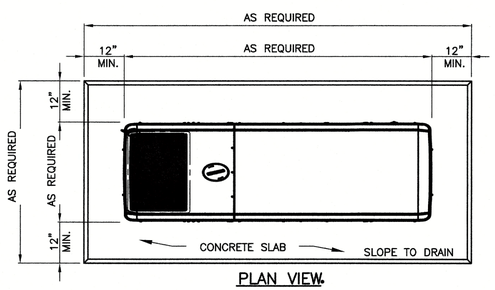

PLAN VIEW

GENERATOR PAD NOTES:

1. THE SYSTEM SHALL BE COMPLETELY SELF CONTAINED. COMPLETE WITH GENERATOR SET, FUEL FEED LINES, STARTING BATTERIES AND CHARGER, AND ALL OTHER MISC. ITEMS TO FORM A COMPLETE AND OPERABLE SYSTEM.
2. DIMENSIONS MAY VARY DEPENDING UPON THE ACTUAL GENERATOR UNIT SUPPLIED.
3. GENERATOR TO BE ANCHOR BOLTED TO SLAB PER MANUFACTURER'S INSTRUCTIONS. VIBRATION ISOLATION PADS TO BE INSTALLED BETWEEN CONCRETE PAD & GENERATOR.
4. CONTRACTOR SHALL VERIFY PAD WITH ENGINE-GENERATOR SYSTEM SUPPLIER PRIOR TO POURING PAD.

GENERATOR PAD DETAIL

SCALE: NOT TO SCALE

NORTH CAROLINA PROFESSIONAL SEAL 16871 ENGINEER RANDALL W. STURGILL
4/25/2023

LIFT STATIONS 3-3 ~~& 15-1~~
REPLACEMENT
PINEHURST, NC

DATE: APRIL 2023
DESIGNED BY: RWS
CADD BY: RWS

ELECTRICAL DETAILS

REVISIONS

NO.	DATE	BY	DESCRIPTION

SHEET
E6