MOORE COUNTY PUBLIC UTILITIES

PINEHURST WELL NO. 24 AND WELL NO. 8 REHABILITATION

PINEHURST, NORTH CAROLINA

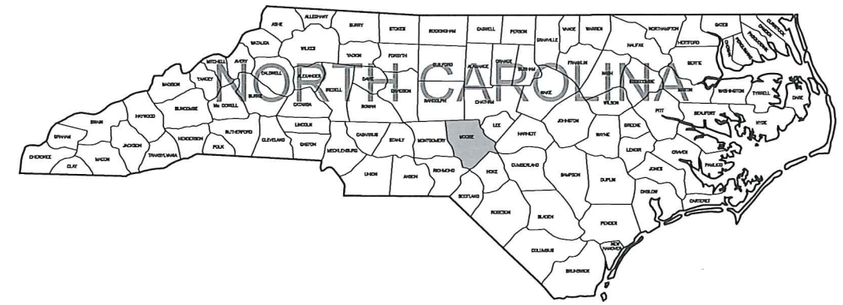

LOCATION MAP
N.T.S.

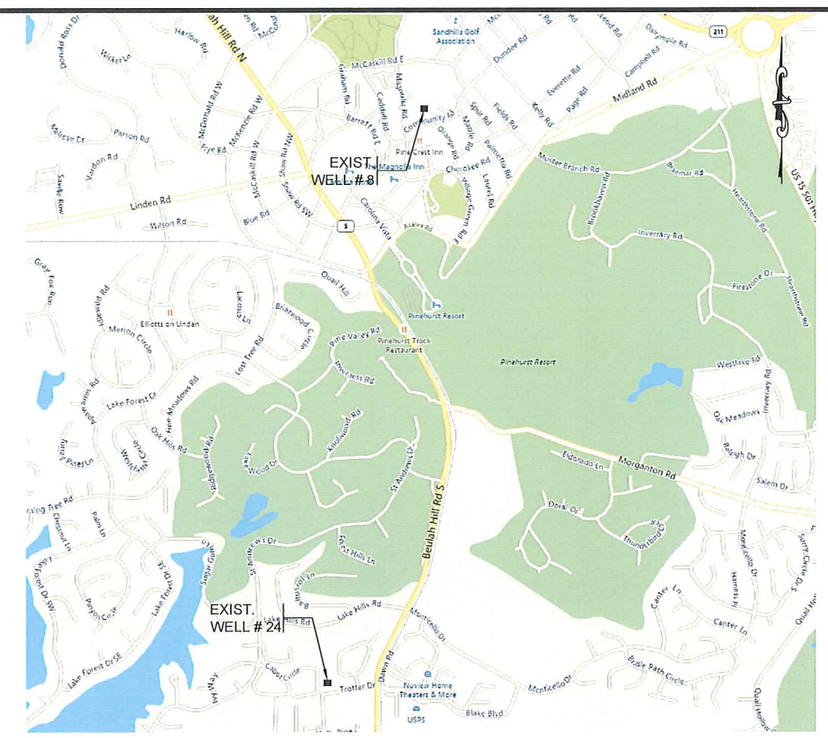

VICINITY MAP
N.T.S.

Version: 1

MBU CONSULTING ENGINEERS, P.A.
1300 SECOND AVENUE
SUITE 211
CONWAY, SC 29526
Phone: (843) 488-0124
Fax: (843) 488-0129
NC License No. C-644

NORTH CAROLINA PROFESSIONAL SEAL 025942 ENGINEER J. CHARLES McGOUGH
2.26.16

FEBRUARY 2016

JOB NO. 14020

11x17 DWGS. ARE TRUE HALF SCALE

FINAL DRAWINGS NOT FOR CONSTRUCTION

GENERAL CONSTRUCTION ABBREVIATIONS

#	NUMBER OR POUND	INFL	INFLUENT
~	DIAMETER	INS.	INSIDE
&	AND	INV.	INVERT
<	LESS THAN	JT.	JOINT
<=	LESS THAN OR EQUAL TO	JTS	JOINTS
>	GREATER THAN	L.L.O.	LONG LEG OUT
@	AT	LB	POUND
A.B.	ANCHOR BOLT	LG	LONG
A.F.F.	ABOVE FINISHED FLOOR	L.P.	LOW POINT
ADDL	ADDITIONAL	M.J.	MECHANICAL JOINT
ALUM	ALUMINUM OR ALUM	MATL.	MATERIAL
APPROX	APPROXIMATE(LY)	MAS	MASONRY
ARCH	ARCHITECTURAL	MAX	MAXIMUM
BM	BENCH MARK OR BEAM	MECH	MECHANICAL
BOTT.	BOTTOM	MFR	MANUFACTURER
B.W.	BLOCK WALL	MH	MANHOLE
C.I.	CAST IRON	MIN	MINIMUM
C/C	CENTER TO CENTER	MNTG	MOUNTING
CAP	CAPACITY	N.P.W.	NONPOTABLE WATER
CIRCUM	CIRCUMFERENCE	N.T.S.	NOT TO SCALE
CL	CLAY	NO.	NUMBER
CLR.	CLEARANCE	O.C.	ON CENTER
℄	CENTERLINE	O/O	OUTSIDE TO OUTSIDE
CL2	CHLORINE	OPNG	OPENING
CLARIF	CLARIFIER	OX	OXIDATION
CHEM.	CHEMICAL	P.E.	PLAIN END
COL	COLUMN	PED	PEDESTAL
CONC.	CONCRETE	PL	PLATE
CONST	CONSTRUCTION	PLCS.	PLACES
CONT	CONTINUOUS	PROJ	PROJECTION
CONTR	CONTRACTOR	P.S.	PUMP STATION
CU	COPPER	P.V.C.	POLYVINYL CHLORIDE
C.W.	CONCRETE WALL	R.C.P.	REINFORCED CONCRETE PIPE
D	DIAMETER	RAD.	RADIUS
DIA	DIAMETER	RAS	RETURN ACTIVATED SLUDGE
D.I.P.	DUCTILE IRON PIPE	RED	REDUCER
DISCH.	DISCHARGE	REF	REFERENCE
DP	DEEP	REINF	REINFORCING OR REINFORCED
DWLS.	DOWELS	REQ'D	REQUIRED
E.F.	EACH FACE	S.S.	STAINLESS STEEL
E.J.	EXPANSION JOINT	SCH.	SCHEDULE
EA	EACH	SHT	SHEET
EFF.	EFFLUENT	SIM	SIMILAR
EL	ELEVATION	SO2	SULFUR DIOXIDE
ELEV	ELEVATION	SPA	SPACES
EQ	EQUAL	SQ.	SQUARE
EQUIP	EQUIPMENT	STD.	STANDARD
EXIST.	EXISTING	STL	STEEL
EXP.	EXPANSION	STN	STAINLESS
F.E.S.	FLARED END SECTION	S.W.	SLAB WIDTH
F.R.P.	FIBERGLASS REINFORCED PLASTIC	S.W.D.	SIDE WALL DEPTH
		T/	TOP OF
FIG	FIGURE	TCJ,CJ	TYP. CONTROL JOINT, CONSTRUCTION JOINT
FIN	FINISHED		
FL.	FLANGE	THRD	THREAD(S)(ED)
FLR	FLOOR	TRICK	TRICKLING
FTG	FOOTING	TYP	TYPICAL
GALV	GALVANIZED	U.O.N.	UNLESS OTHERWISE NOTED
HDWE	HARDWARE	VERT	VERTICAL
HK	HOOK	W.W.F.	WELDED WIRE FABRIC
HORIZ.	HORIZONTAL	W/	WITH
H.P.	HIGH POINT	W/O	WITHOUT
HYD	HYDRANT	WAS	WASTE ACTIVATED SLUDGE
I.D.	INSIDE DIAMETER	W/L	WATER LEVEL
O.D.	OUTSIDE DIAMETER		

SECTION/DETAIL LEGEND

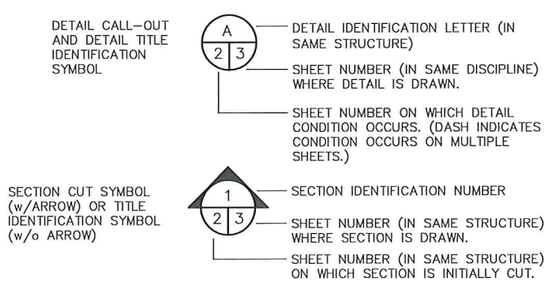

INDEX OF SHEETS

1 COVER SHEET
2 GENERAL NOTES & INDEX
3 WELL NO. 8 SITE PLAN
4 WELL NO. 24 SITE PLAN
5 WELL ENCLOSURE FLOOR PLAN AND SECTIONS
6 WELL ENCLOSURE EXTERIOR ELEVATIONS
7 CHEMICAL FEED BUILDING FOUNDATION/FLOOR PLAN AND DETAILS
8 CHEMICAL FEED BUILDING WALL SECTIONS
9 CHEMICAL FEED BUILDING EXTERIOR ELEVATIONS
10 CHEMICAL FEED BUILDING ROOF FRAMING PLAN, WELL NO. 24 WELL CONSTRUCTION RECORD
11 WELL NO. 8 CHEMICAL FEED BUILDING PIPING PLAN AND ELEVATIONS
12 EXISTING WELL HOUSE NO. 6 DEMOLITION
13 WELL NO. 24 CHEMICAL FEED BUILDING PIPING PLAN AND ELEVATIONS
14 MISCELLANEOUS WATER DETAILS
15 MISCELLANEOUS DETAILS

E-1 ELECTRICAL LEGEND,ABBREVIATIONS,AND NOTES
E-2 WELL NO. 8 ELECTRICAL SITE PLAN
E-3 WELL NO. 8 ELECTRICAL ONE-LINE AND SCHEMATICS
E-4 WELL NO. 8 ELECTRICAL LIGHTING AND POWER
E-5 WELL NO. 24 ELECTRICAL SITE PLAN
E-6 WELL NO. 24 ELECTRICAL ONE-LINE AND SCHEMATICS
E-7 WELL NO. 24 ELECTRICAL LIGHTING AND POWER
E-8 ELECTRICAL DETAILS

FINAL DRAWINGS
NOT FOR CONSTRUCTION

NORTH CAROLINA PROFESSIONAL ENGINEER SEAL 025942 J. CHARLES MCCOLLUM
2.25.16

MBJ CONSULTING ENGINEERS, P.A.
1300 SECOND AVENUE
SUITE 211
CONWAY, SC 29526
Phone: (843) 488-0124
Fax: (843) 488-0129

GENERAL NOTES AND INDEX

MOORE COUNTY PUBLIC UTILITIES
PINEHURST WELL NO. 24 AND
WELL NO. 8 REHABILITATION
PINEHURST, NORTH CAROLINA

Scale:	AS SHOWN
Date:	FEB. 2016
Drawn:	DC
Checked:	JCM
Job No.:	14020
Sheet No.:	2
Of: -	Version: 1

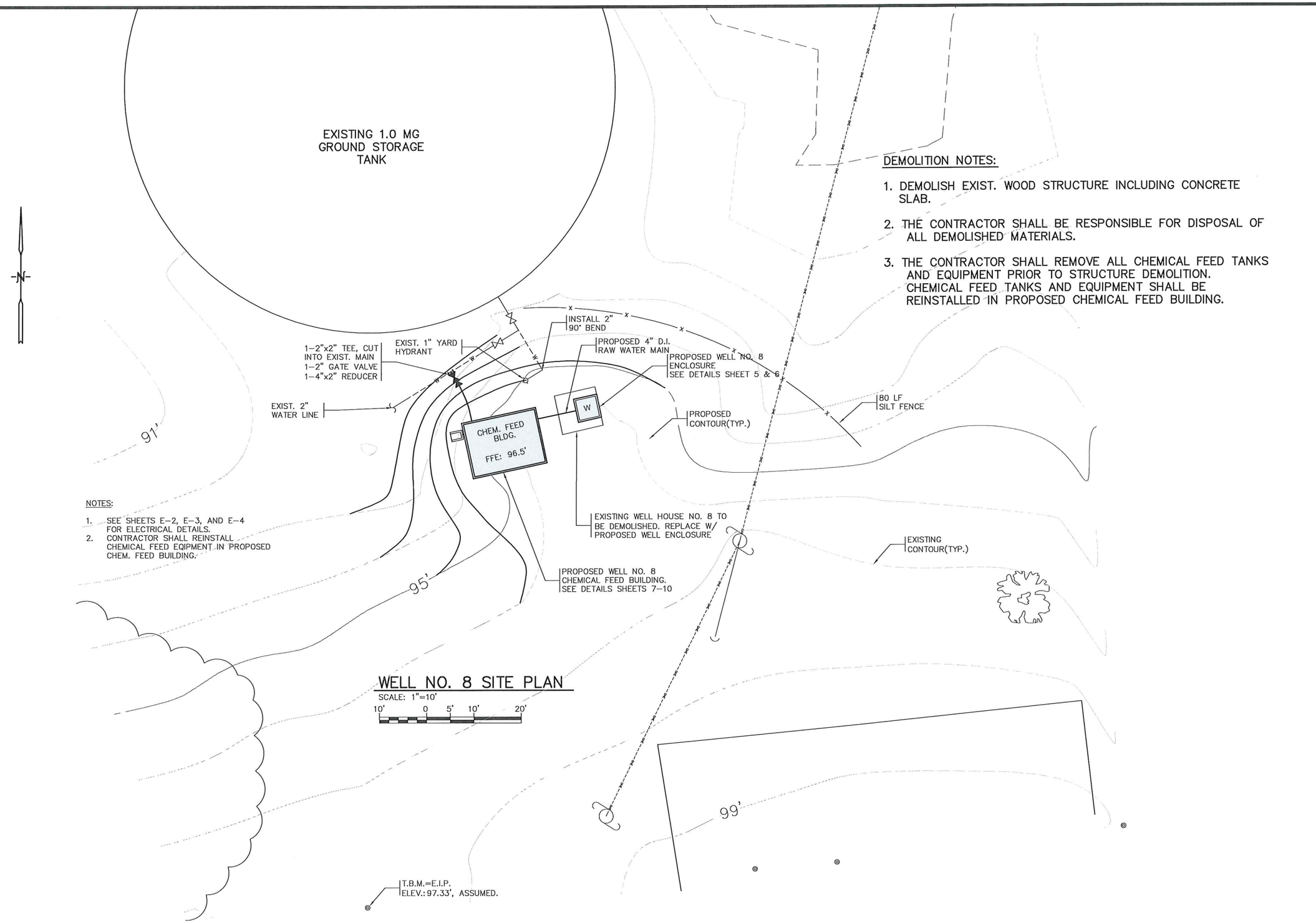

NOTES:

1. SEE SHEETS E-2, E-3, AND E-4 FOR ELECTRICAL DETAILS.
2. CONTRACTOR SHALL REINSTALL CHEMICAL FEED EQIPMENT IN PROPOSED CHEM. FEED BUILDING.

WELL NO. 8 SITE PLAN

SCALE: 1"=10'

10' 0 5' 10' 20'

DEMOLITION NOTES:

1. DEMOLISH EXIST. WOOD STRUCTURE INCLUDING CONCRETE SLAB.
2. THE CONTRACTOR SHALL BE RESPONSIBLE FOR DISPOSAL OF ALL DEMOLISHED MATERIALS.
3. THE CONTRACTOR SHALL REMOVE ALL CHEMICAL FEED TANKS AND EQUIPMENT PRIOR TO STRUCTURE DEMOLITION. CHEMICAL FEED TANKS AND EQUIPMENT SHALL BE REINSTALLED IN PROPOSED CHEMICAL FEED BUILDING.

FINAL DRAWINGS
NOT FOR CONSTRUCTION

MBD CONSULTING ENGINEERS, P.A.
1300 SECOND AVENUE
SUITE 211
CONWAY, SC 29526
Phone: (843) 488-0124
Fax: (843) 488-0129

WELL NO. 8 SITE PLAN

MOORE COUNTY PUBLIC UTILITIES
PINEHURST WELL NO. 24 AND
WELL NO. 8 REHABILITATION
PINEHURST, NORTH CAROLINA

Scale:	AS SHOWN
Date:	FEB. 2016
Drawn:	DC
Checked:	JCM
Job No.:	14020
Sheet No.:	3
Of: -	Version: 1

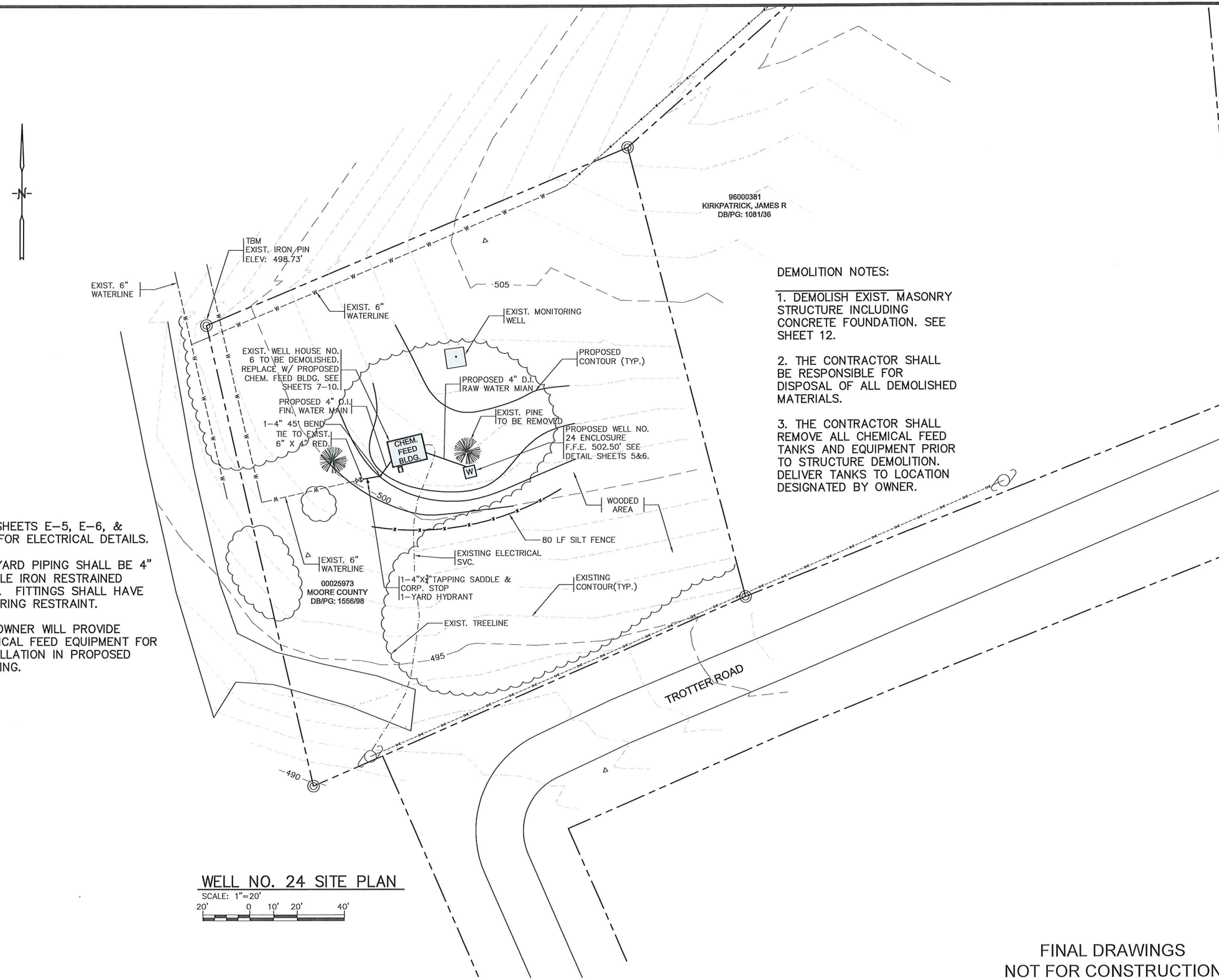

DEMOLITION NOTES:

1. DEMOLISH EXIST. MASONRY STRUCTURE INCLUDING CONCRETE FOUNDATION. SEE SHEET 12.

2. THE CONTRACTOR SHALL BE RESPONSIBLE FOR DISPOSAL OF ALL DEMOLISHED MATERIALS.

3. THE CONTRACTOR SHALL REMOVE ALL CHEMICAL FEED TANKS AND EQUIPMENT PRIOR TO STRUCTURE DEMOLITION. DELIVER TANKS TO LOCATION DESIGNATED BY OWNER.

NOTES:

1. SEE SHEETS E-5, E-6, & E-7 FOR ELECTRICAL DETAILS.

2. ALL YARD PIPING SHALL BE 4" DUCTILE IRON RESTRAINED JOINT. FITTINGS SHALL HAVE GRIP RING RESTRAINT.

3. THE OWNER WILL PROVIDE CHEMICAL FEED EQUIPMENT FOR INSTALLATION IN PROPOSED BUILDING.

WELL NO. 24 SITE PLAN

SCALE: 1"=20'

20' 0 10' 20' 40'

FINAL DRAWINGS
NOT FOR CONSTRUCTION

NORTH CAROLINA PROFESSIONAL ENGINEER 025942 J. CHARLES McCOUGH 2.26.16

MBD CONSULTING ENGINEERS, P.A.
1300 SECOND AVENUE
SUITE 211
CONWAY, SC 29526
Phone: (843) 488-0124
Fax: (843) 488-0129

WELL NO. 24 SITE PLAN

MOORE COUNTY PUBLIC UTILITIES
PINEHURST WELL NO. 24 AND
WELL NO. 8 REHABILITATION
PINEHURST, NORTH CAROLINA

Scale:	AS SHOWN
Date:	FEB. 2016
Drawn:	DC
Checked:	JCM
Job No.:	14020
Sheet No.:	4
Of:	-
Version:	1

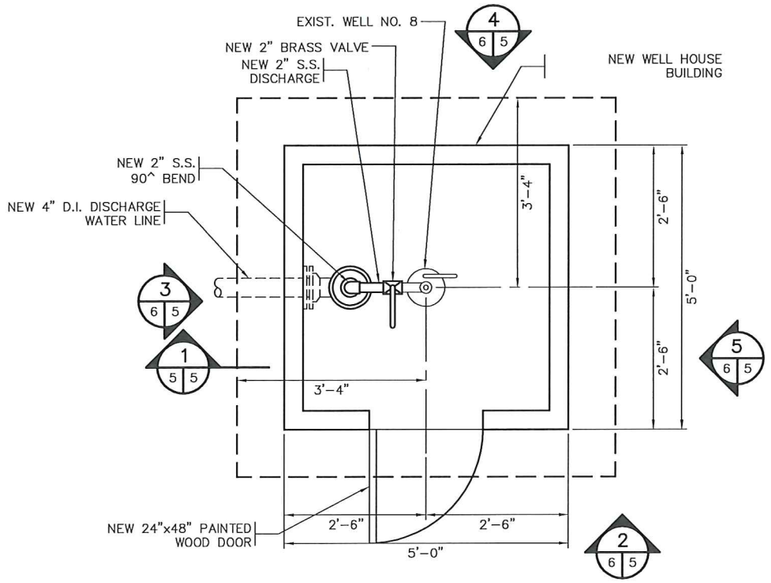

WELL NO. 8 ENCLOSURE FLOOR PLAN

SCALE: 3/4"=1'-0"

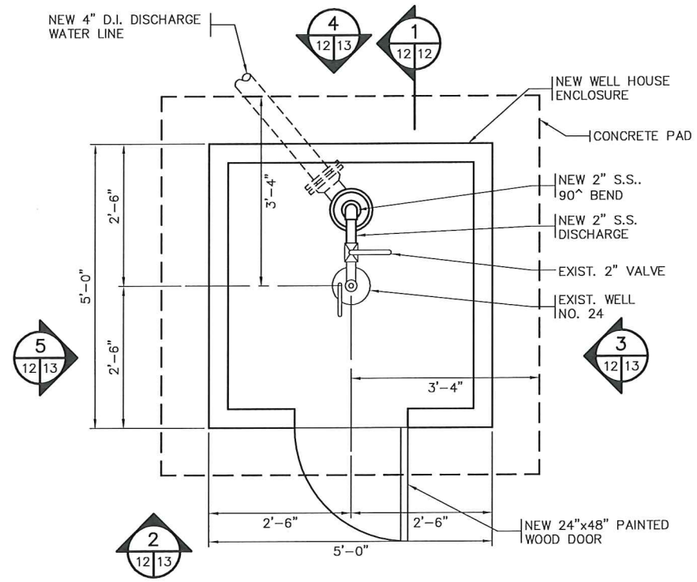

WELL NO. 24 ENCLOSURE FLOOR PLAN

SCALE: 3/4"=1'-0"

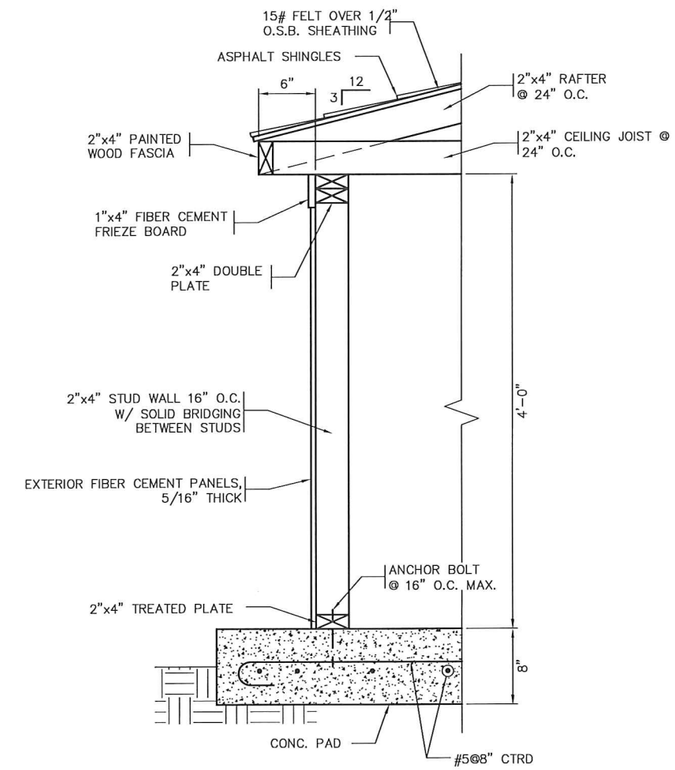

WELL ENCLOSURE TYP. WALL SECTION

SCALE: 1 1/2"=1'-0"

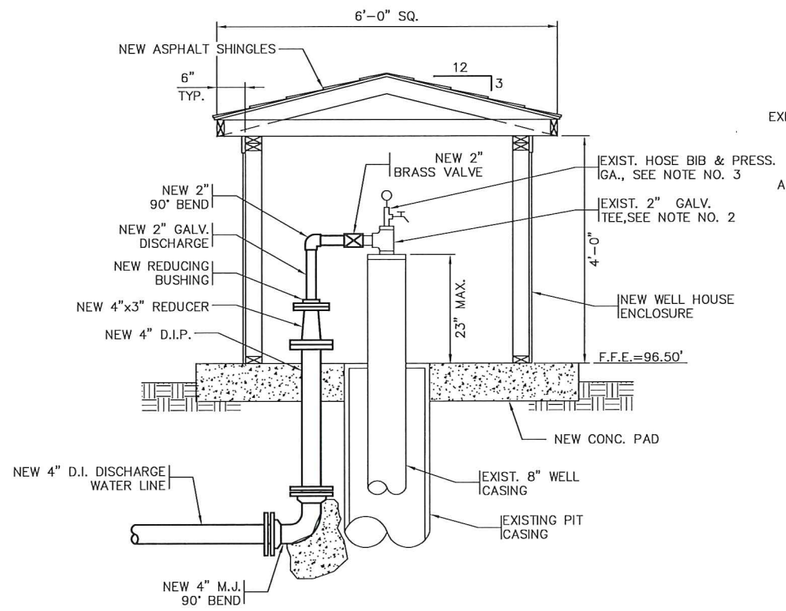

1 / 5 5 WELL NO. 8 ENCLOSURE CROSS SECTION

SCALE: 3/4"=1'-0"

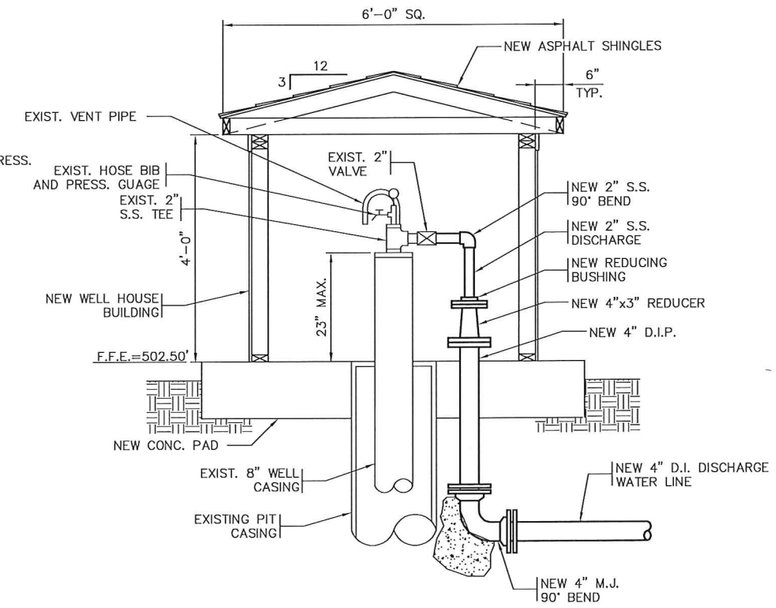

1 / 12 12 WELL NO. 24 ENCLOSURE CROSS SECTION

SCALE: 3/4"=1'-0"

NOTES:

1. SEE SHEET 10 FOR WELL NO. 24 CONSTRUCTION RECORD.
2. REPLACE EXISTING 2" GALV. TEE FOR WELL NO. 8 WITH 2" S.S. TEE.
3. REPLACE EXIST. NON-THREAD HOSE BIB AND PRESS. GAUGE FOR WELL NO. 8 WITH NEW WITH NEW GAUGE, S.S. NON-THREAD HOSE BIB, AND S.S. FITTINGS.

FINAL DRAWINGS
NOT FOR CONSTRUCTION

MBD CONSULTING ENGINEERS, P.A.
1300 SECOND AVENUE
SUITE 211
CONWAY, SC 29526
Phone: (843) 488-0124
Fax: (843) 488-0129

WELL ENCLOSURE
FLOOR PLAN AND SECTIONS

MOORE COUNTY PUBLIC UTILITIES
PINEHURST WELL NO. 24 AND
WELL NO. 8 REHABILITATION
PINEHURST, NORTH CAROLINA

Scale:	AS SHOWN
Date:	FEB. 2016
Drawn:	DC
Checked:	JCM
Job No.:	14020
Sheet No.:	5
Of:	-
Version:	1

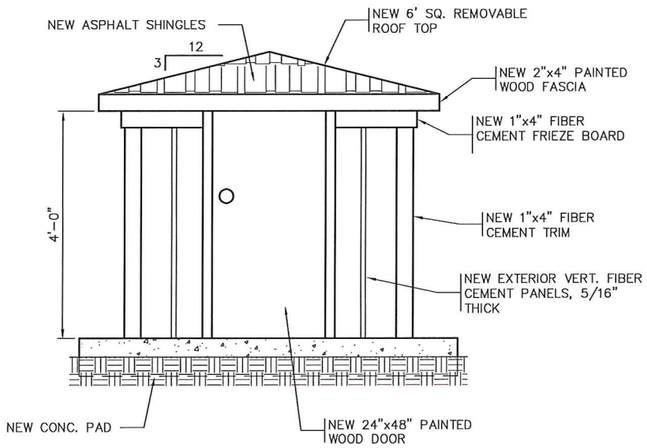

2 / 5 6 WELL ENCLOSURE EXTERIOR ELEVATION
SCALE: 3/4"=1'-0"
1' 6" 0 1' 2'

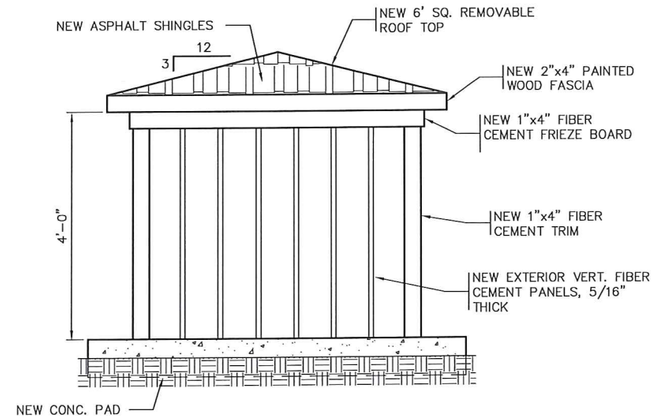

3 / 5 6 WELL ENCLOSURE EXTERIOR ELEVATION
SCALE: 3/4"=1'-0"
1' 6" 0 1' 2'

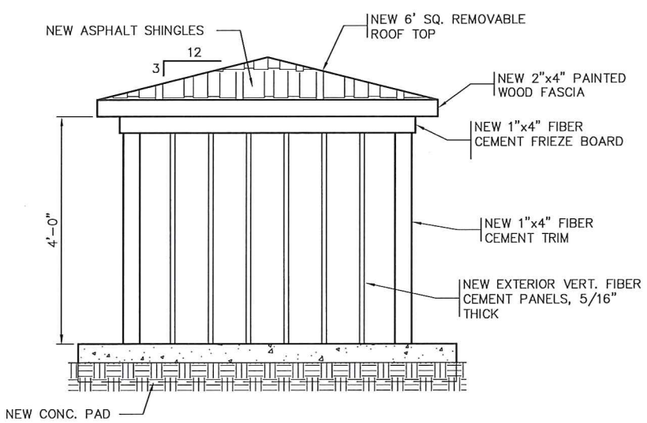

4 / 5 6 WELL ENCLOSURE EXTERIOR ELEVATION
SCALE: 3/4"=1'-0"
1' 6" 0 1' 2'

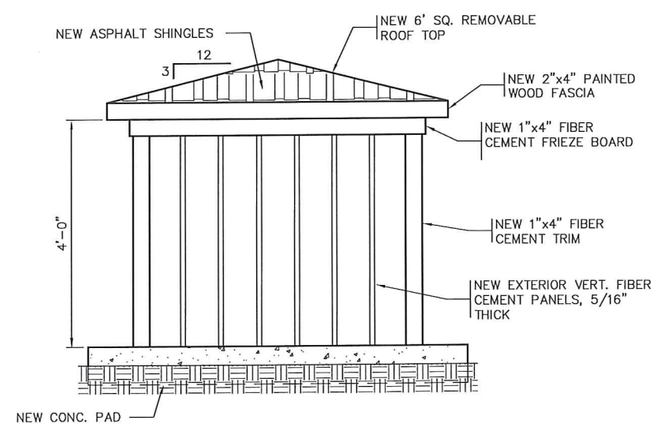

5 / 5 6 WELL ENCLOSURE EXTERIOR ELEVATION
SCALE: 3/4"=1'-0"
1' 6" 0 1' 2'

FINAL DRAWINGS
NOT FOR CONSTRUCTION

NORTH CAROLINA PROFESSIONAL ENGINEER SEAL 025942 CHARLES M. COLEY 2/26/16

MBD CONSULTING ENGINEERS, P.A.
1300 SECOND AVENUE
SUITE 211
CONWAY, SC 29526
Phone: (843) 488-0124
Fax: (843) 488-0129

WELL ENCLOSURE EXTERIOR ELEVATIONS

MOORE COUNTY PUBLIC UTILITIES
PINEHURST WELL NO. 24 AND
WELL NO. 8 REHABILITATION
PINEHURST, NORTH CAROLINA

Scale:	AS SHOWN
Date:	FEB. 2016
Drawn:	DC
Checked:	JCM
Job No.:	14020
Sheet No.:	6
Of: -	Version: 1

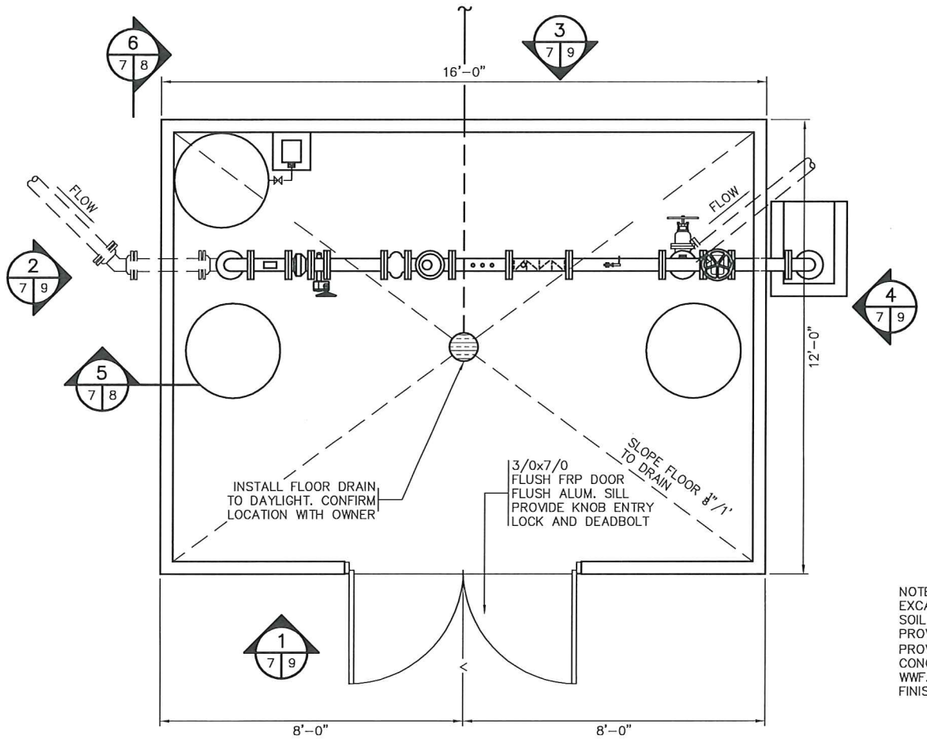

WELL NO. 24 CHEMICAL FEED BUILDING
FLOOR PLAN
SCALE: 1/2"=1'-0"

NOTE:
EXCAVATE TO CLEAN SOIL.
SOIL BEARING ASSUMED 2500 P.S.I.
PROVIDE COMPACTED CLEAN FILL.
PROVIDE 6 MIL POLY VAPOR BARRIER. 4" CONC. SLAB TO BE REINFORCED WITH WWF. APPLY CONCRETE SEALER TO FINISHED SLAB.

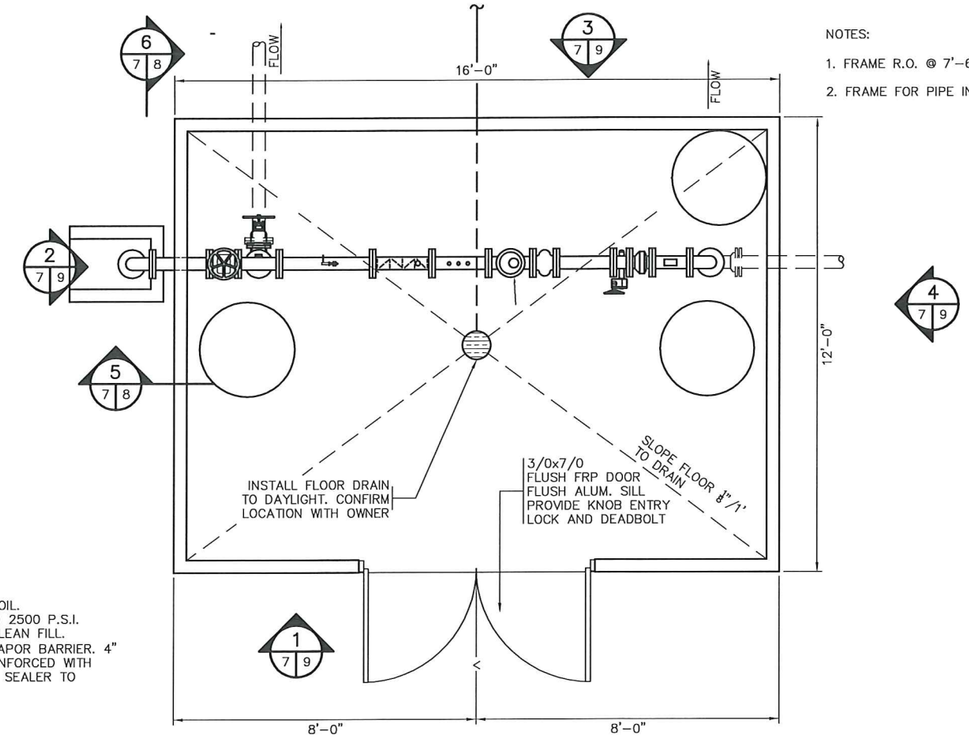

WELL NO. 8 CHEMICAL FEED BUILDING
FLOOR PLAN
SCALE: 1/2"=1'-0"

NOTES:

1. FRAME R.O. @ 7'-6" ABOVE F.F.
2. FRAME FOR PIPE INSTALLATION

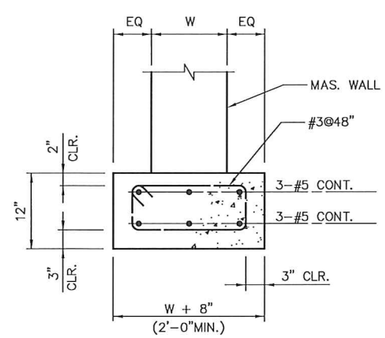

CHEMICAL FEED BUILDING
TYP. WALL FOOTING REINF. DETAIL
N.T.S.

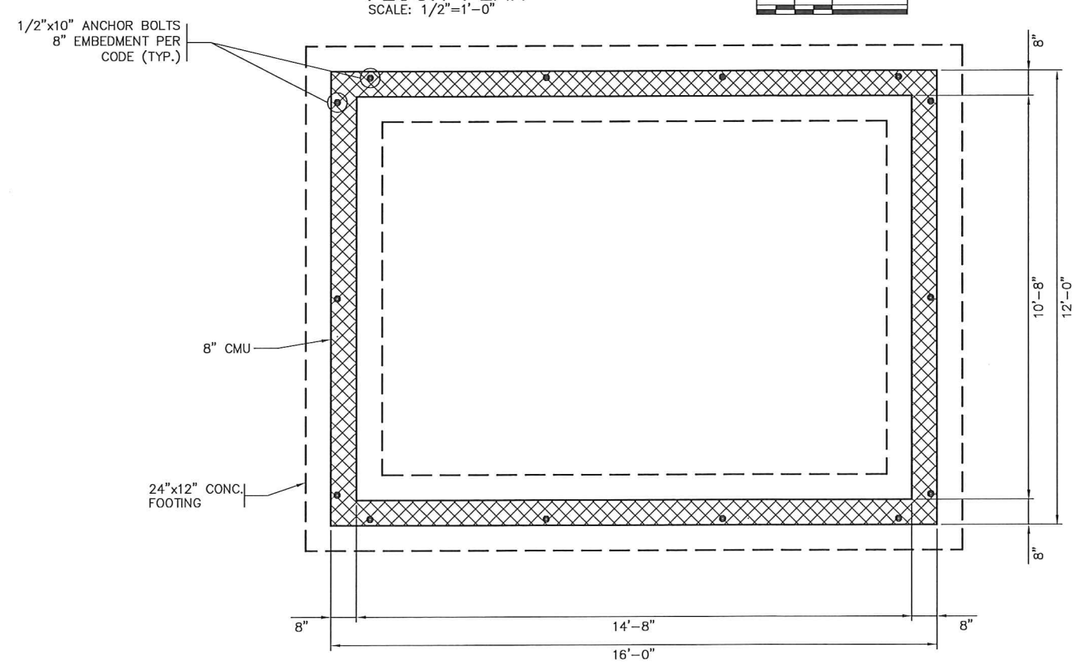

CHEMICAL FEED BUILDING
FOUNDATION PLAN
SCALE: 1/2"=1'-0"

FINAL DRAWINGS
NOT FOR CONSTRUCTION

MBJ CONSULTING ENGINEERS, P.A.
1300 SECOND AVENUE
SUITE 211
CONWAY, SC 29526
Phone: (843) 488-0124
Fax: (843) 488-0129

CHEMICAL FEED BUILDING
FOUNDATION / FLOOR PLAN
AND DETAILS

MOORE COUNTY PUBLIC UTILITIES
PINEHURST WELL NO. 24 AND
WELL NO. 8 REHABILITATION
PINEHURST, NORTH CAROLINA

Scale:	AS SHOWN
Date:	FEB. 2016
Drawn:	DC
Checked:	JCM
Job No.:	14020
Sheet No.:	7
Of:	-
Version:	1

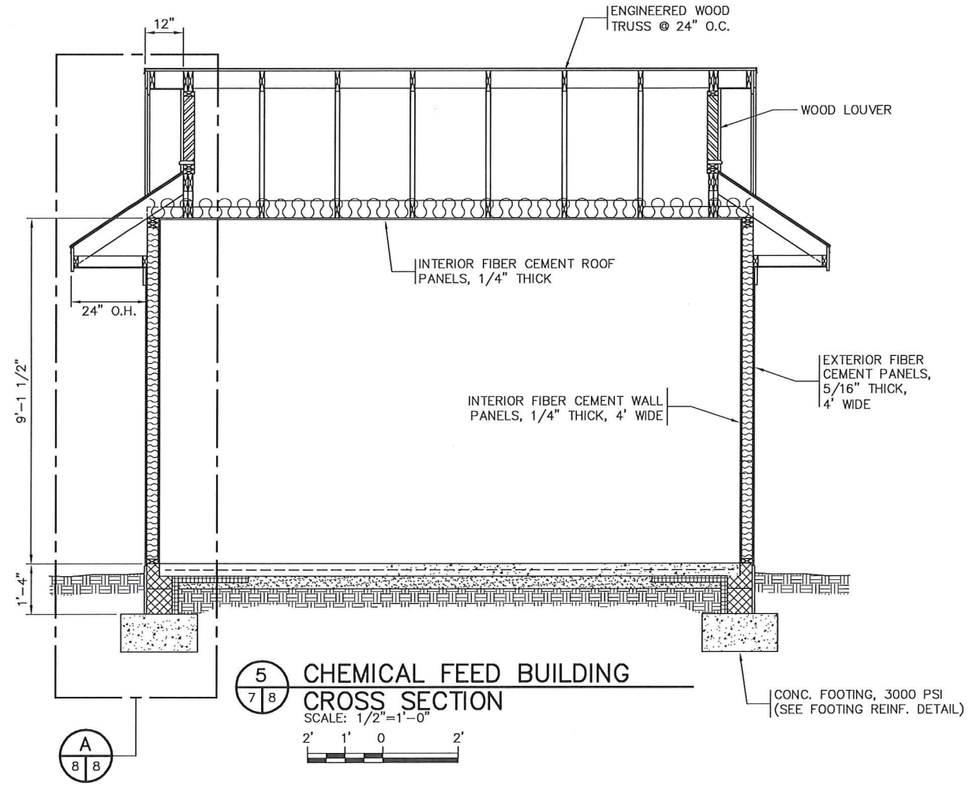

5 / 7 8 CHEMICAL FEED BUILDING CROSS SECTION
SCALE: 1/2"=1'-0"
2' 1' 0 2'

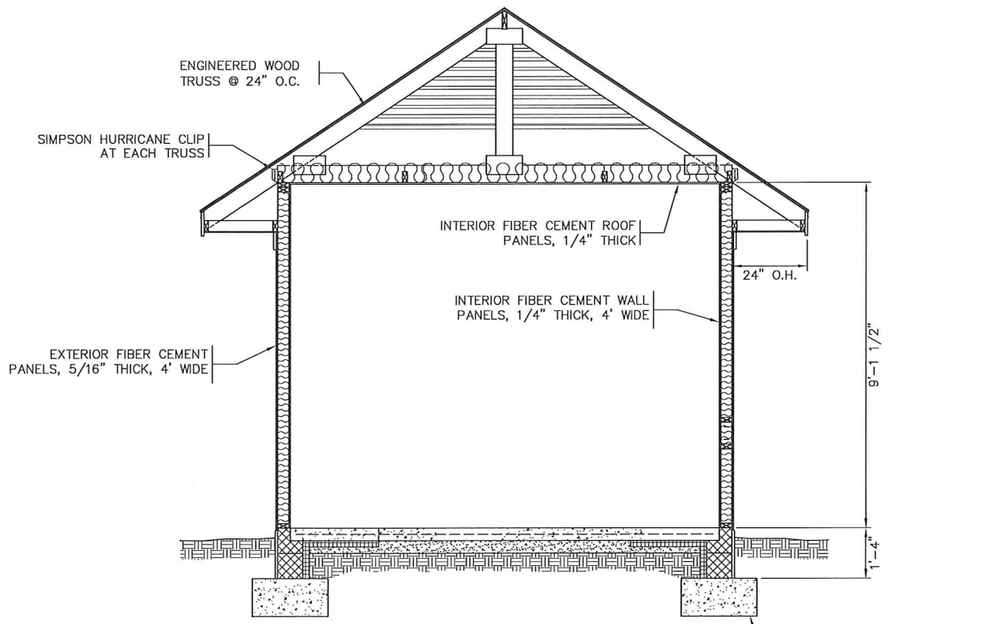

6 / 7 8 CHEMICAL FEED BUILDING CROSS SECTION
SCALE: 1/2"=1'-0"
2' 1' 0 2'

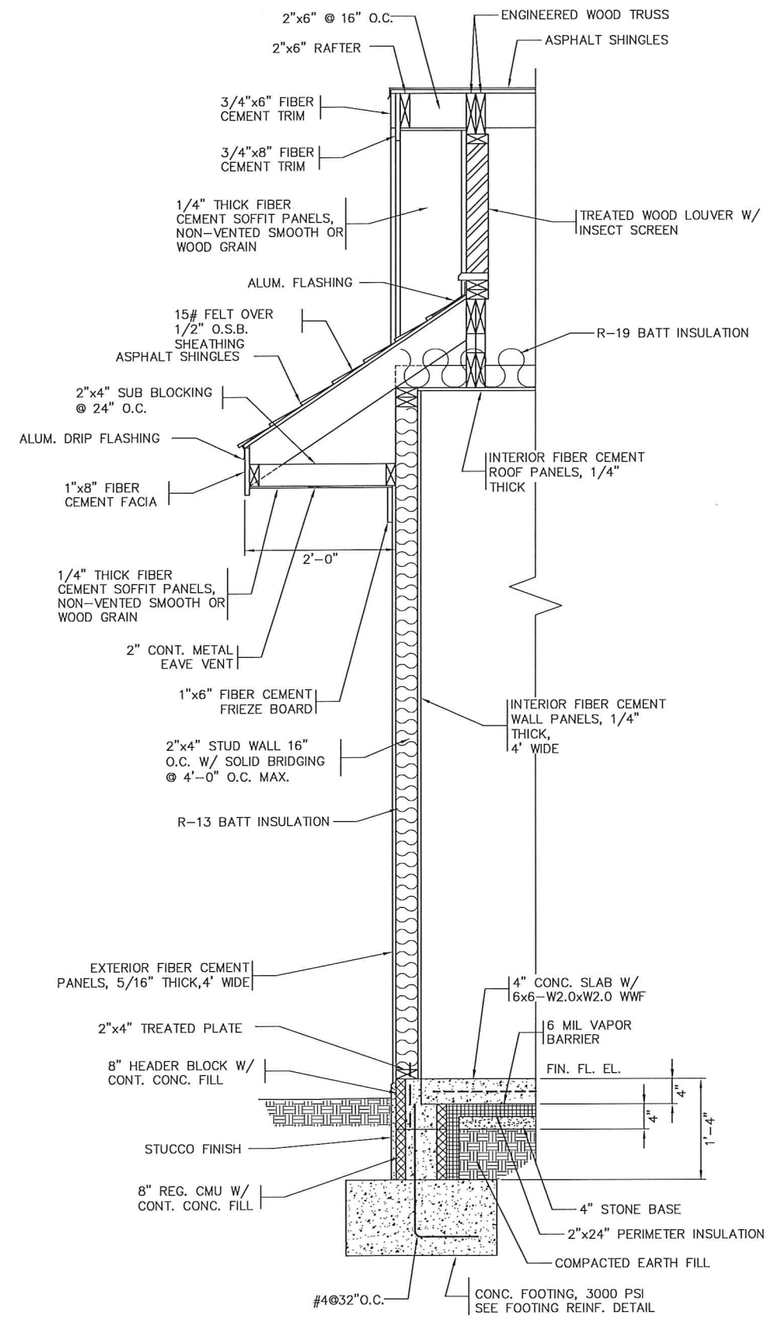

A / 8 8 CHEMICAL FEED BUILDING WALL SECTION
SCALE: 1"=1'-0"
1' 0 1' 2'

FINAL DRAWINGS
NOT FOR CONSTRUCTION

MBD CONSULTING ENGINEERS, P.A.
1300 SECOND AVENUE
SUITE 211
CONWAY, SC 29526
Phone: (843) 488-0124
Fax: (843) 488-0129

NORTH CAROLINA PROFESSIONAL ENGINEER SEAL 025942 JAMES CHARLES MCCULLOUGH
5-27-16

CHEMICAL FEED BUILDING WALL SECTIONS

MOORE COUNTY PUBLIC UTILITIES
PINEHURST WELL NO. 24 AND
WELL NO. 8 REHABILITATION
PINEHURST, NORTH CAROLINA

Scale:	AS SHOWN
Date:	FEB. 2016
Drawn:	DC
Checked:	JCM
Job No.:	14020
Sheet No.:	8
Of: -	Version: 1

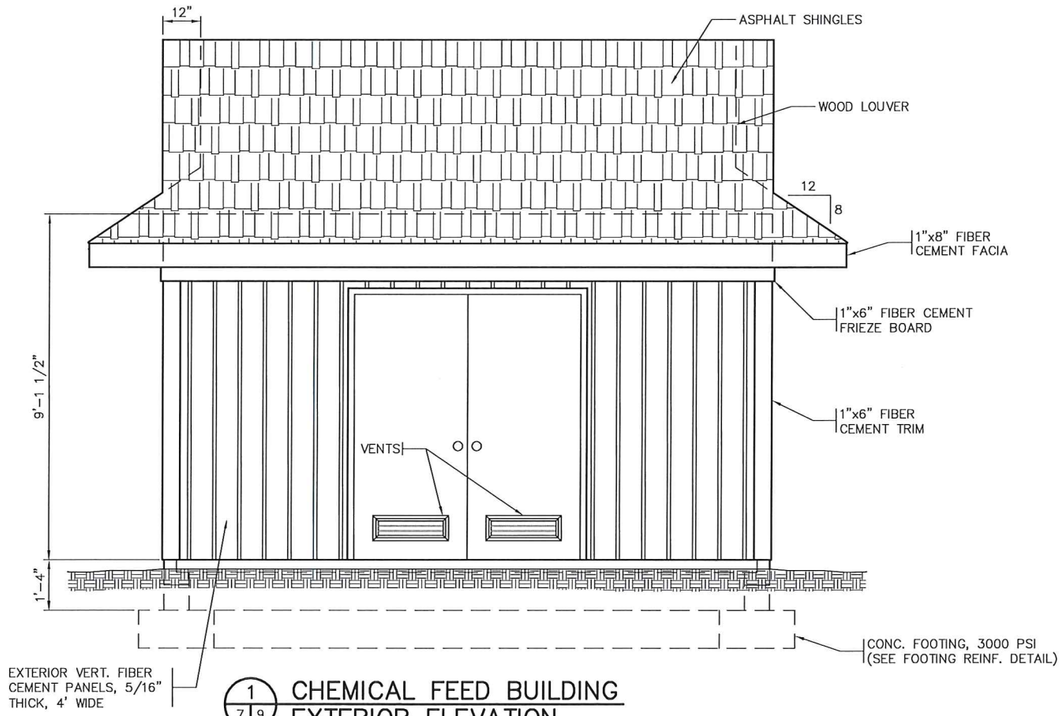

1 / 7 9 CHEMICAL FEED BUILDING EXTERIOR ELEVATION
SCALE: 1/2"=1'-0"
2' 1' 0 2'

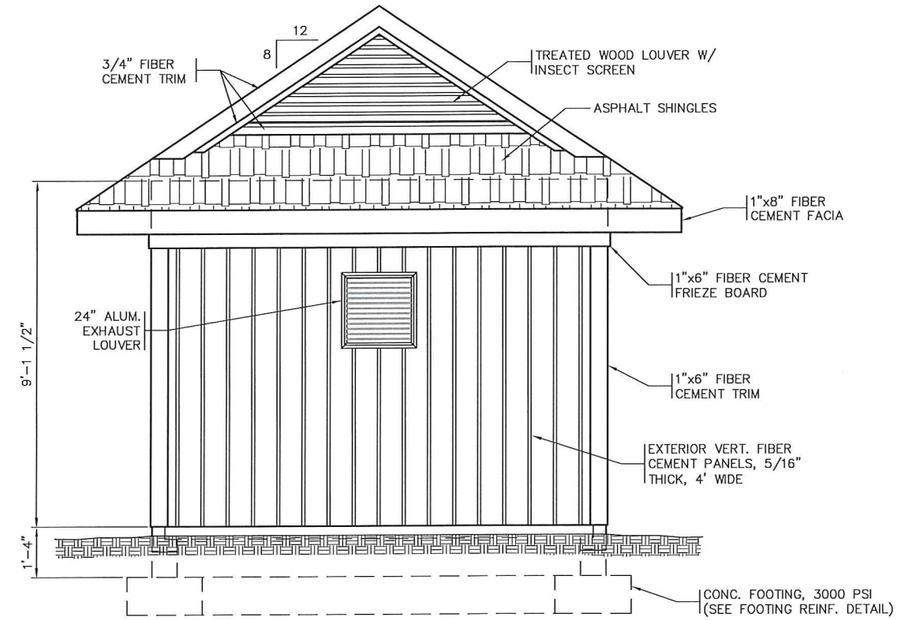

2 / 7 9 CHEMICAL FEED BUILDING EXTERIOR ELEVATION
SCALE: 1/2"=1'-0"
2' 1' 0 2'

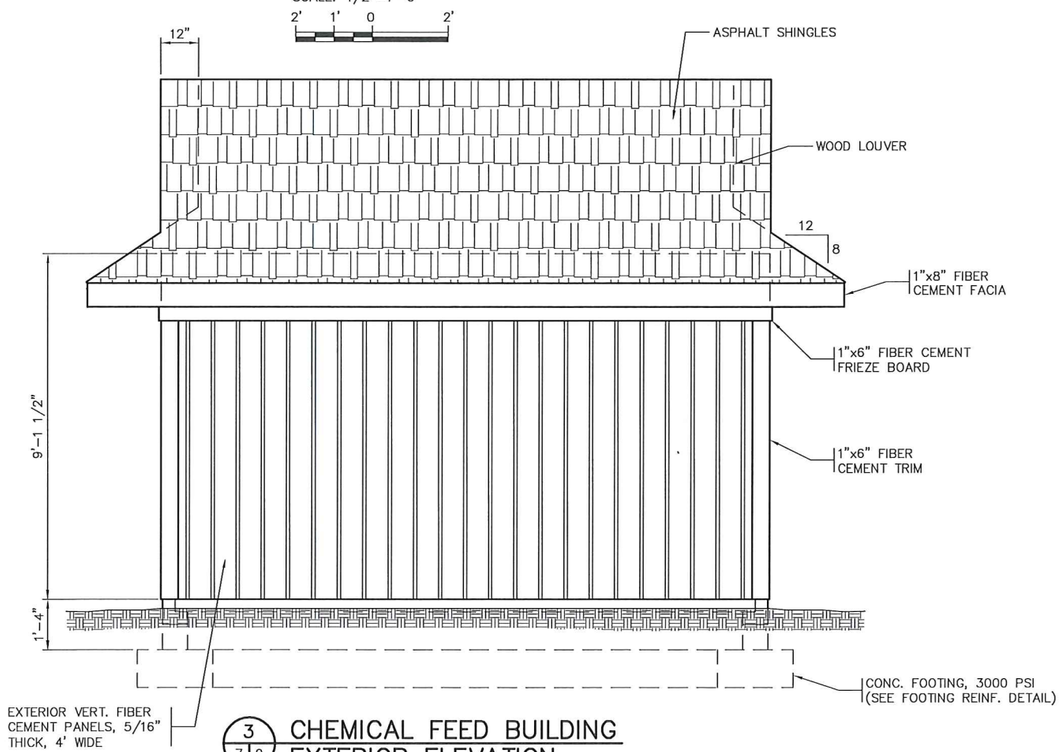

3 / 7 9 CHEMICAL FEED BUILDING EXTERIOR ELEVATION
SCALE: 1/2"=1'-0"
2' 1' 0 2'

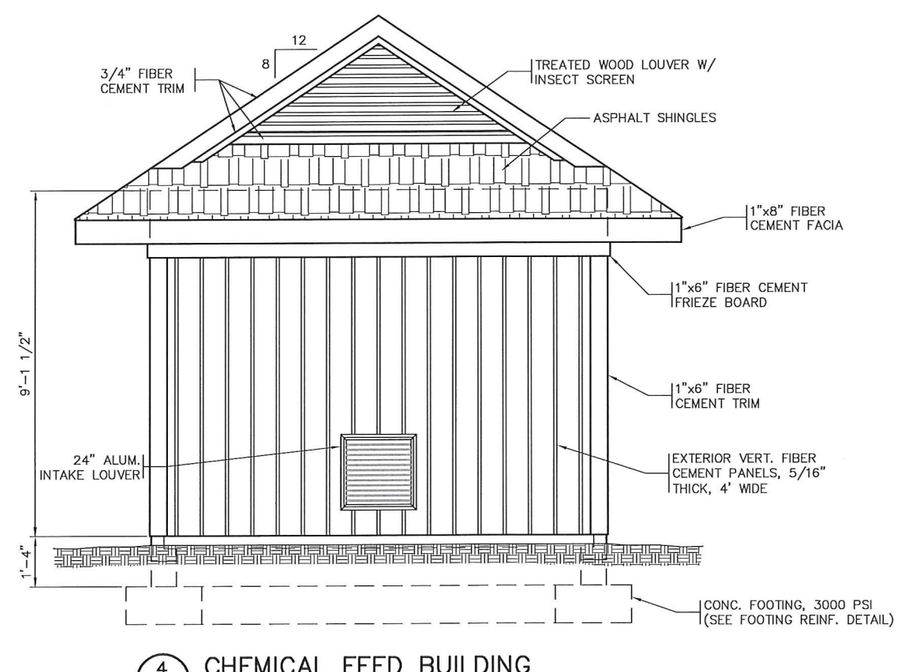

4 / 7 9 CHEMICAL FEED BUILDING EXTERIOR ELEVATION
SCALE: 1/2"=1'-0"
2' 1' 0 2'

FINAL DRAWINGS
NOT FOR CONSTRUCTION

MBD CONSULTING ENGINEERS, P.A.
1300 SECOND AVENUE
SUITE 211
CONWAY, SC 29526
Phone: (843) 488-0124
Fax: (843) 488-0129

CHEMICAL FEED BUILDING
EXTERIOR ELEVATIONS

MOORE COUNTY PUBLIC UTILITIES
PINEHURST WELL NO. 24 AND
WELL NO. 8 REHABILITATION
PINEHURST, NORTH CAROLINA

Scale:	AS SHOWN
Date:	FEB. 2016
Drawn:	DC
Checked:	JCM
Job No.:	14020
Sheet No.:	9
Of:	-
Version:	1

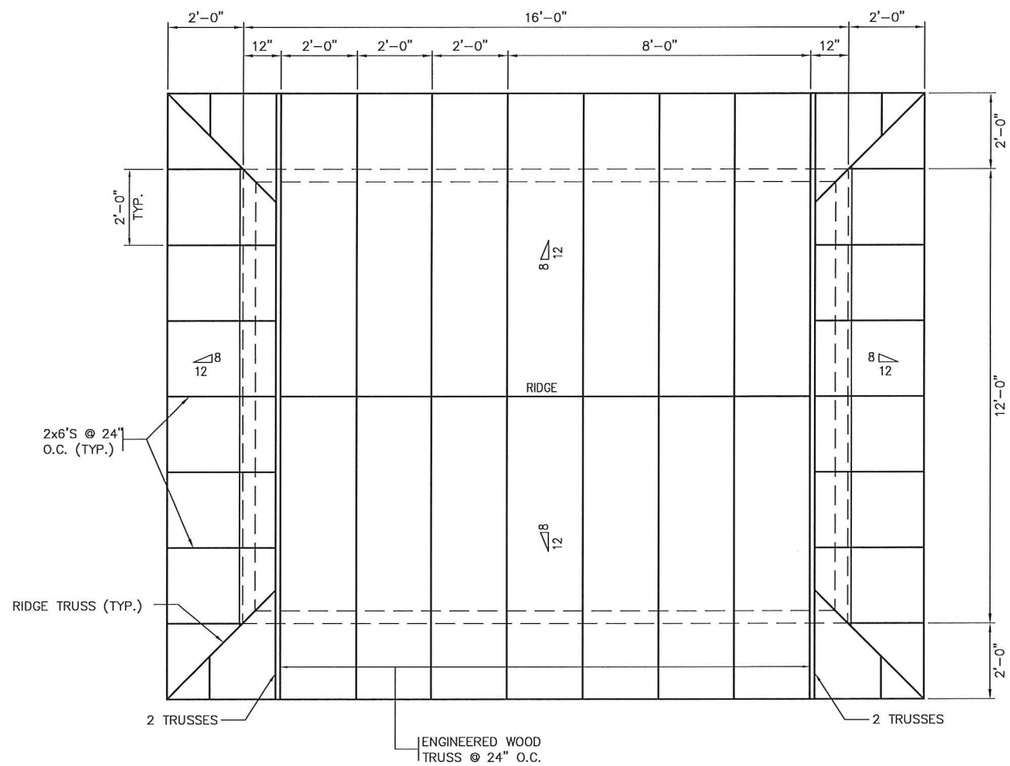

ROOF FRAMING PLAN

SCALE: 1/2"=1'-0"

2' 1' 0 2'

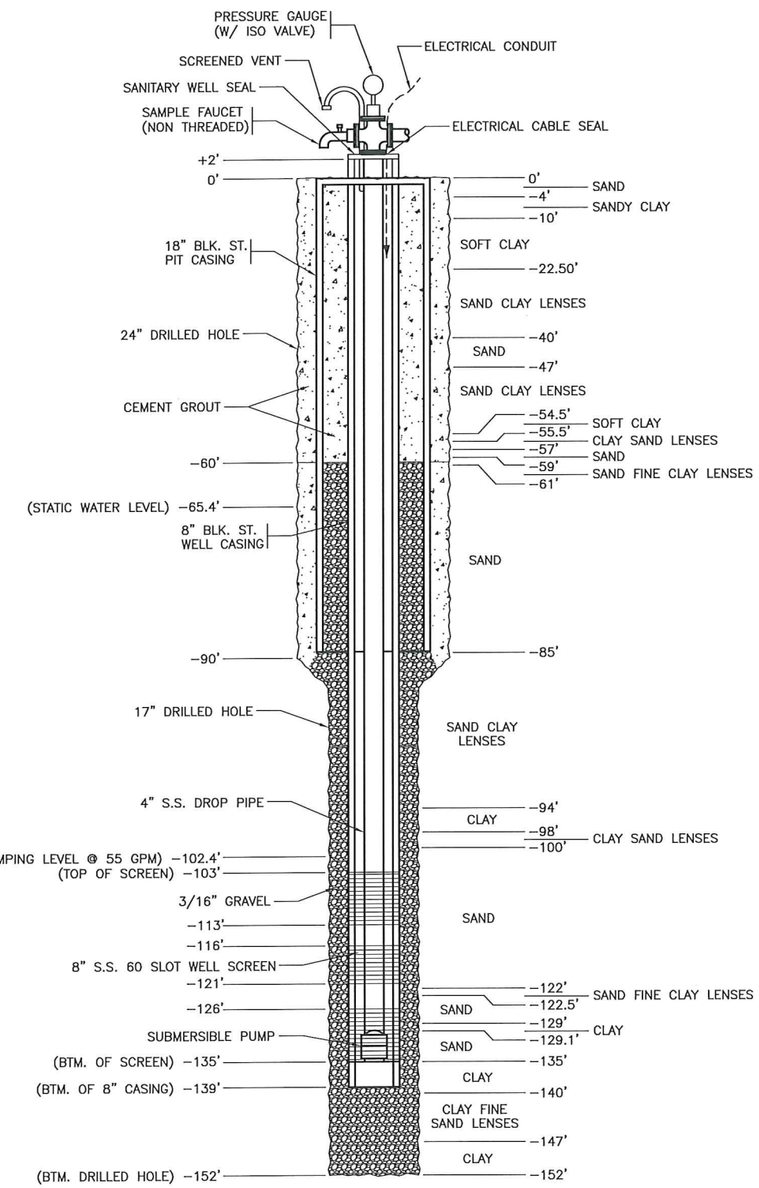

WELL NO. 24 CONSTRUCTION RECORD

NTS

FINAL DRAWINGS
NOT FOR CONSTRUCTION

MBD CONSULTING ENGINEERS, P.A.
1300 SECOND AVENUE
SUITE 211
CONWAY, SC 29526
Phone: (843) 488-0124
Fax: (843) 488-0129

CHEMICAL FEED BUILDING
ROOF FRAMING PLAN,
WELL NO. 24
CONSTRUCTION RECORD

MOORE COUNTY PUBLIC UTILITIES
PINEHURST WELL NO. 24 AND
WELL NO. 8 REHABILITATION
PINEHURST, NORTH CAROLINA

Scale:	AS SHOWN
Date:	FEB. 2016
Drawn:	DC
Checked:	JCM
Job No.:	14020
Sheet No.:	10
Of: -	Version: 1

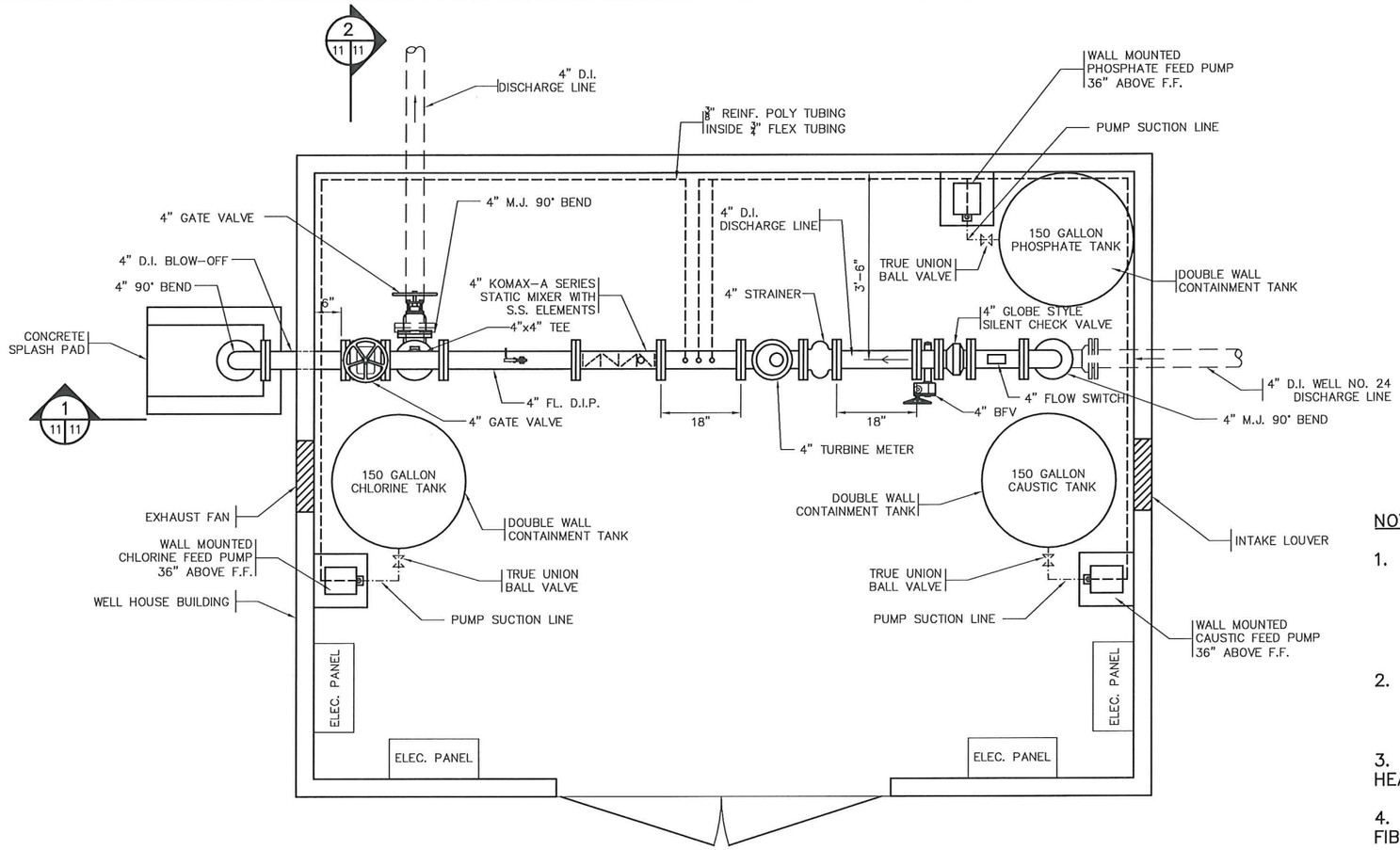

WELL NO. 8 CHEMICAL FEED BUILDING PIPING PLAN

SCALE: 3/4"=1'-0"

1' 6" 0 1' 2'

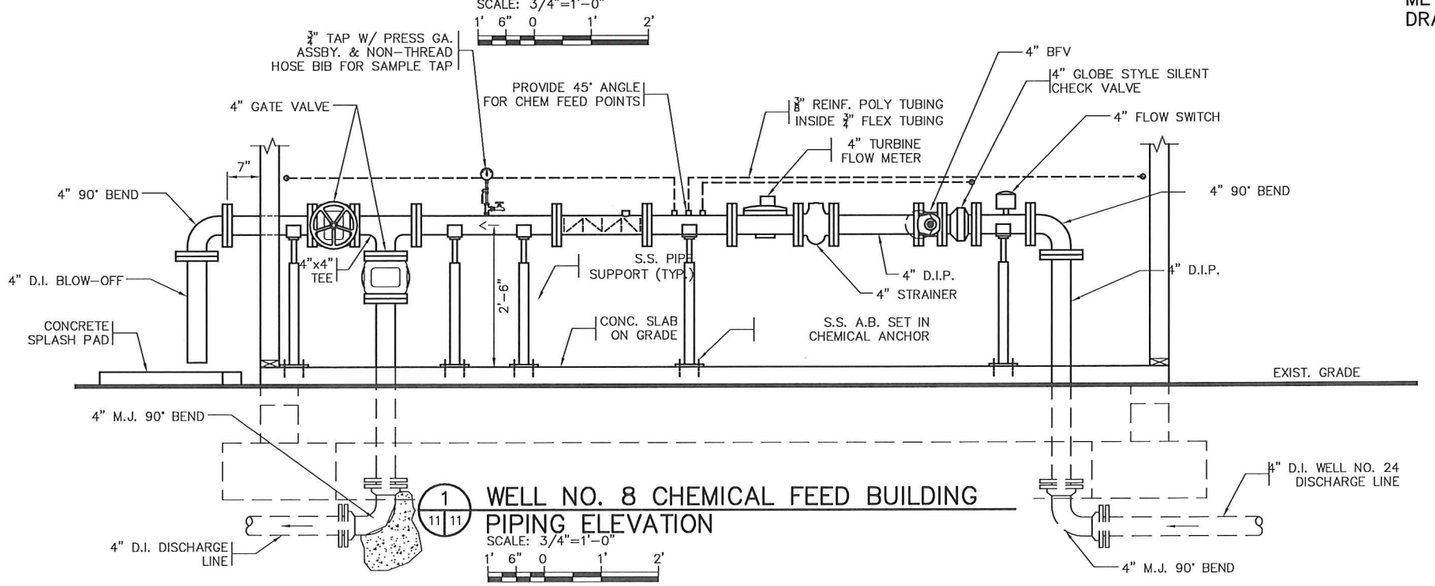

WELL NO. 8 CHEMICAL FEED BUILDING PIPING ELEVATION

SCALE: 3/4"=1'-0"

1' 6" 0 1' 2'

NOTES:

1. PIPE SUPPORTS FOR CHEMICAL FEED LINES, WATER LINES, AND SAMPLE LINES SHALL BE FIBERGLASS UNI-STRUT @ 4'-0" O.C. MAX W/ HDPE AND / OR S.S. HARDWARE.
2. CHEMICAL FEED PIPING SHALL BE 3/8" REINFORCED POLY TUBING INSIDE 3/4" WALL MOUNTED FLEX TUBING.
3. SEE SHEET E-4 FOR LOCATION OF UNIT HEATER AND DEHUMIDIFIER.
4. CHEMICAL TANKS SHALL INCLUDE FIBERGLASS STANDS. SEE DETAIL SHEET 15.
5. CHEMICAL TANK VOLUME AND USAGE SHALL BE MEASURED BY AN ULTRASONIC METER AND CONTROLLER. SEE ELECTRICAL DRAWINGS AND SPECIFICATIONS FOR DETAILS.

FINAL DRAWINGS
NOT FOR CONSTRUCTION

NORTH CAROLINA PROFESSIONAL ENGINEER SEAL 029542 CHARLES W. GRAY JR. 9/26/16

MBJ CONSULTING ENGINEERS, P.A.
1300 SECOND AVENUE
SUITE 211
CONWAY, SC 29526
Phone: (843) 488-0124
Fax: (843) 488-0129

WELL NO. 8 CHEMICAL FEED BUILDING PIPING PLAN AND ELEVATIONS

MOORE COUNTY PUBLIC UTILITIES
PINEHURST WELL NO. 24 AND WELL NO. 8 REHABILITATION
PINEHURST, NORTH CAROLINA

Scale:	AS SHOWN
Date:	FEB. 2016
Drawn:	DC
Checked:	JCM
Job No.:	14020
Sheet No.:	11
Of: -	Version: 1

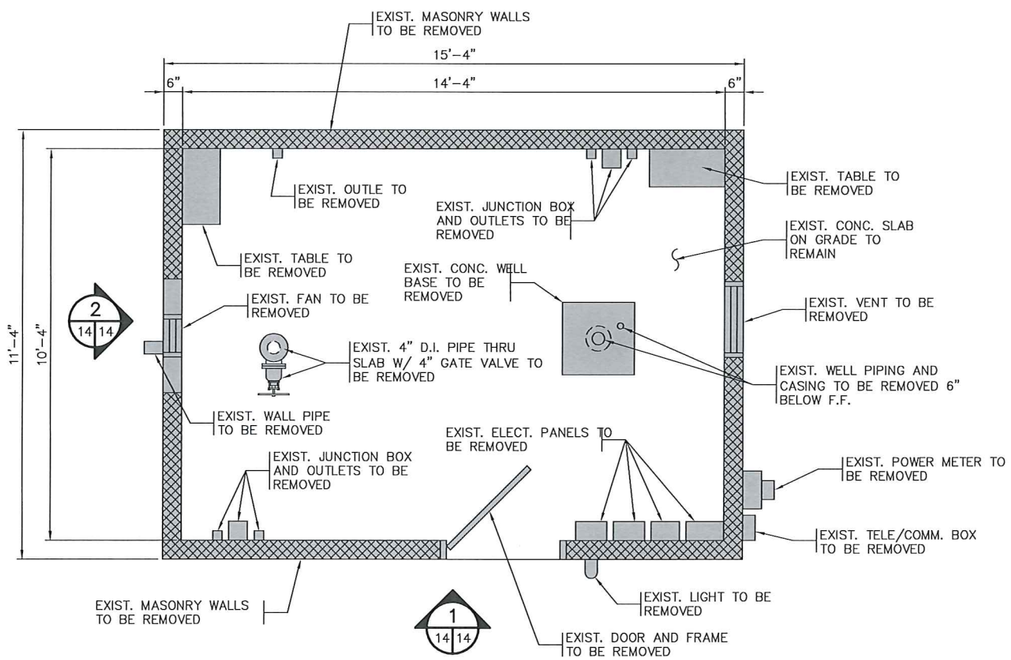

EXISTING WELL HOUSE NO. 6 DEMOLITION PLAN

SCALE: 1/2"=1'-0"

2' 1' 0 2'

LEGEND

INDICATES PORTIONS TO BE REMOVED

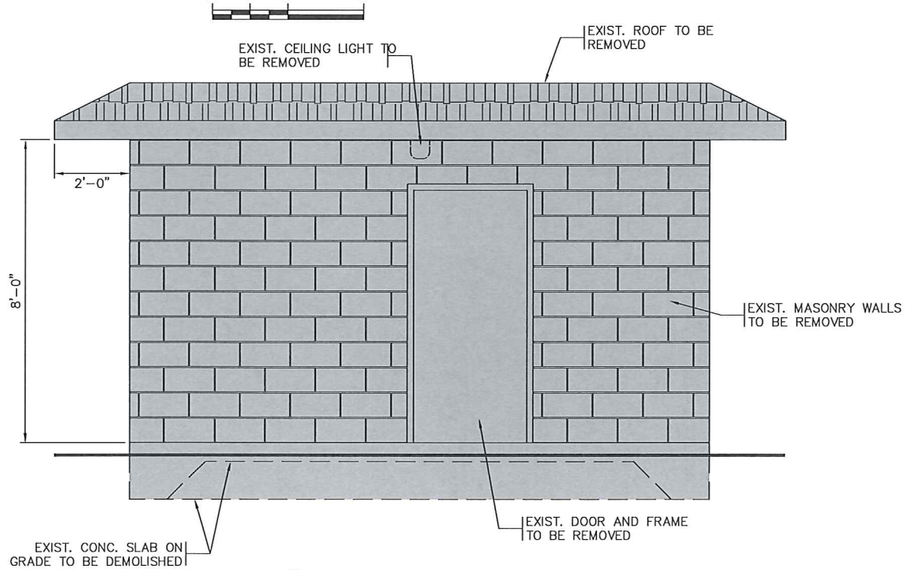

1 (14 14) ELEVATION VIEW DEMOLITION

SCALE: 1/2"=1'-0"

2' 1' 0 2'

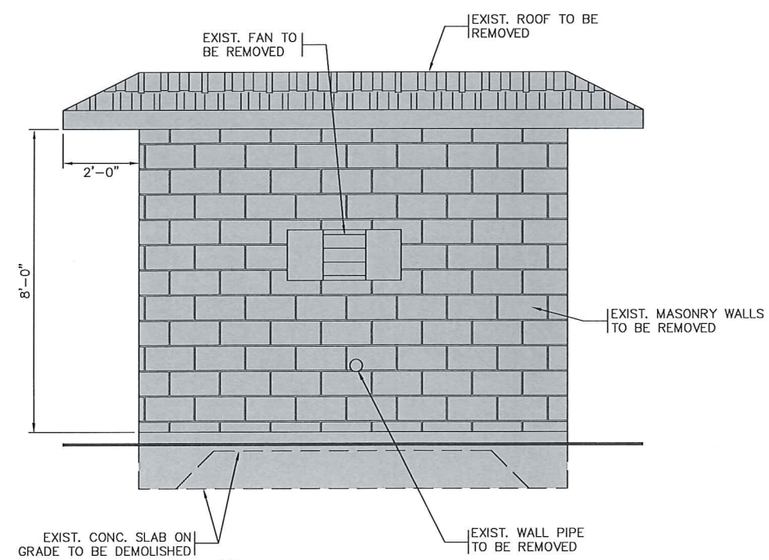

2 (14 14) ELEVATION VIEW DEMOLITION

SCALE: 1/2"=1'-0"

2' 1' 0 2'

FINAL DRAWINGS
NOT FOR CONSTRUCTION

MOBJ CONSULTING ENGINEERS, P.A.
1300 SECOND AVENUE
SUITE 211
CONWAY, SC 29526
Phone: (843) 488-0124
Fax: (843) 488-0129

EXISTING WELL HOUSE NO. 6 DEMOLITION

MOORE COUNTY PUBLIC UTILITIES
PINEHURST WELL NO. 24 AND
WELL NO. 8 REHABILITATION
PINEHURST, NORTH CAROLINA

Scale:	AS SHOWN
Date:	FEB. 2016
Drawn:	DC
Checked:	JCM
Job No.:	14020
Sheet No.:	12
Of:	-
Version:	1

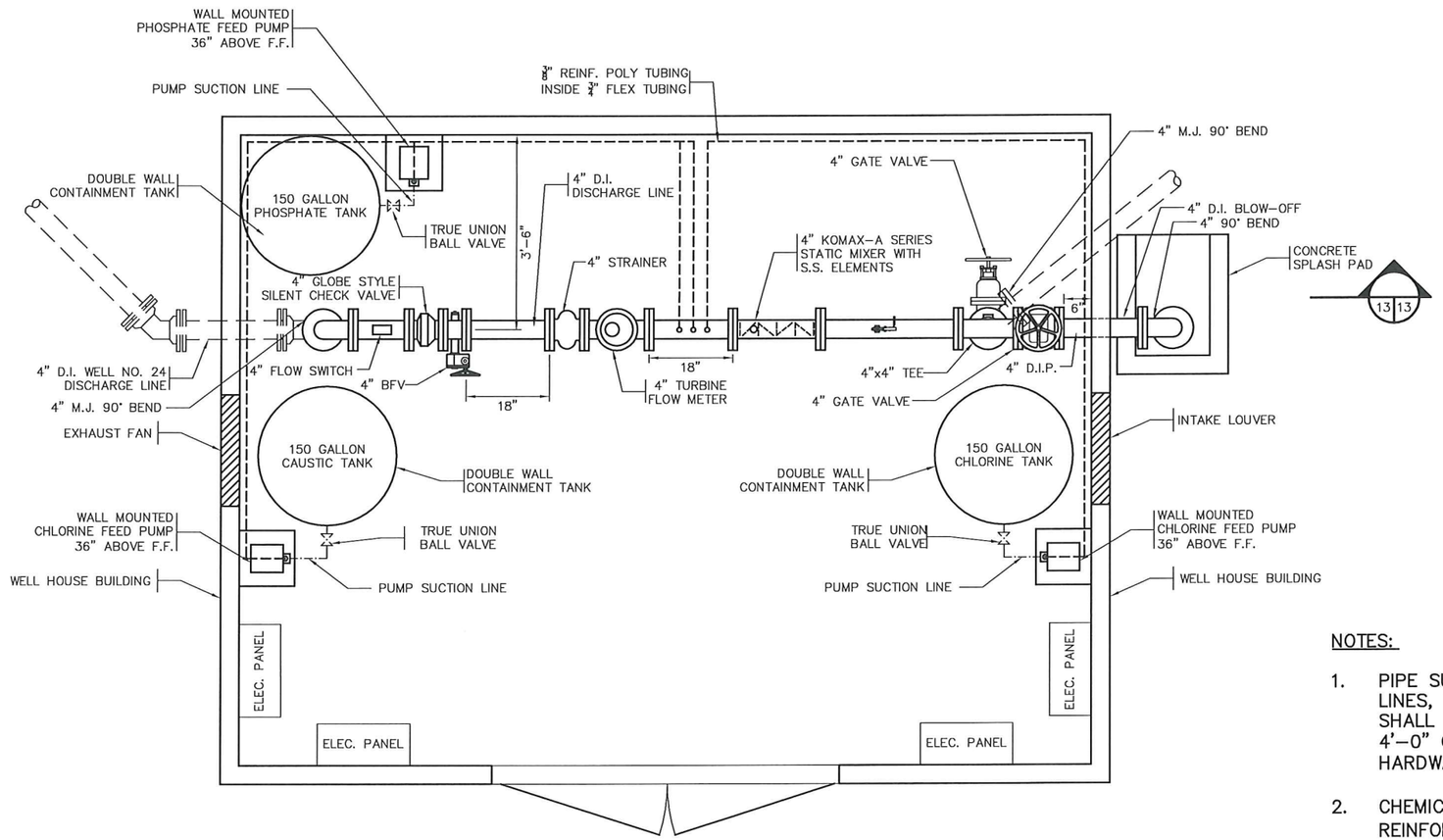

WELL NO. 24 CHEMICAL FEED BUILDING PIPING PLAN

SCALE: 3/4"=1'-0"

1' 6" 0 1' 2'

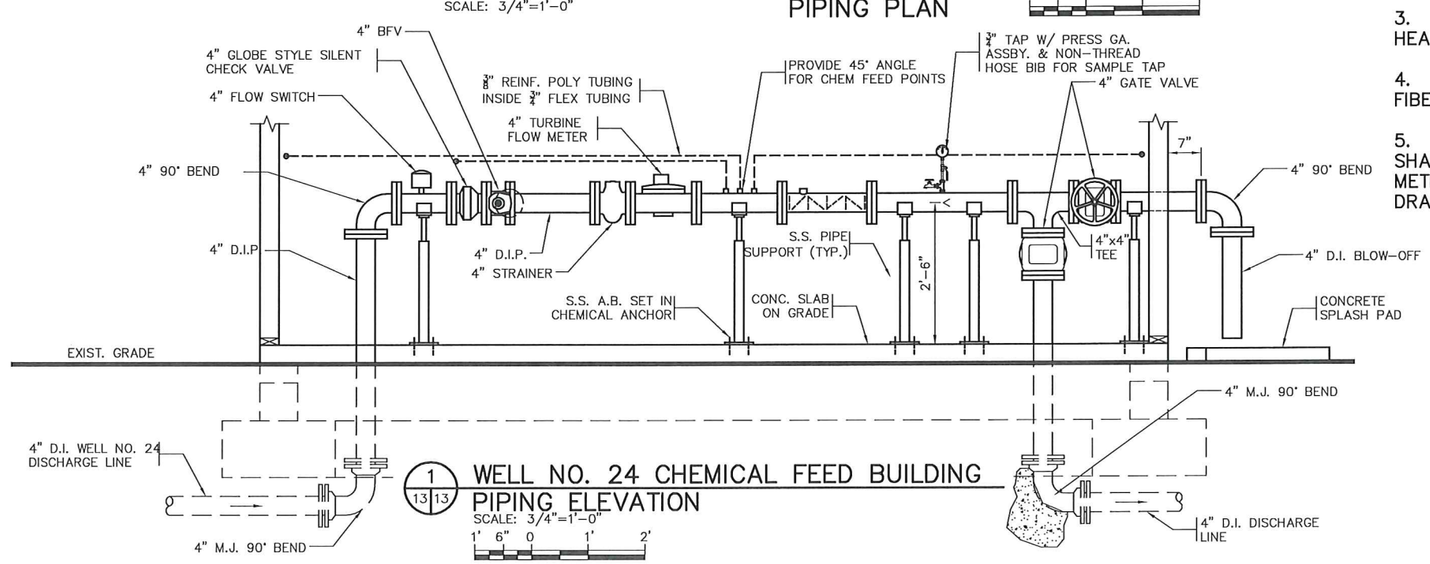

1 / 13 13 WELL NO. 24 CHEMICAL FEED BUILDING PIPING ELEVATION

SCALE: 3/4"=1'-0"

1' 6" 0 1' 2'

NOTES:

1. PIPE SUPPORTS FOR CHEMICAL FEED LINES, WATER LINES, AND SAMPLE LINES SHALL BE FIBERGLASS UNI-STRUT @ 4'-0" O.C. MAX W/ HDPE AND / OR S.S. HARDWARE.

2. CHEMICAL FEED PIPING SHALL BE 3/8" REINFORCED POLY TUBING INSIDE 3/4" WALL MOUNTED FLEX TUBING.

3. SEE SHEET E-4 FOR LOCATION OF UNIT HEATER AND DEHUMIDIFIER.

4. CHEMICAL TANKS SHALL INCLUDE FIBERGLASS STANDS. SEE DETAIL SHEET 15.

5. CHEMICAL TANK VOLUME AND USAGE SHALL BE MEASURED BY AN ULTRASONIC METER AND CONTROLLER. SEE ELECTRICAL DRAWINGS AND SPECIFICATIONS FOR DETAILS.

FINAL DRAWINGS
NOT FOR CONSTRUCTION

MBD CONSULTING ENGINEERS, P.A.
1300 SECOND AVENUE
SUITE 211
CONWAY, SC 29526
Phone: (843) 488-0124
Fax: (843) 488-0129

NEW WELL HOUSE NO. 24
PIPING PLAN
AND ELEVATIONS

MOORE COUNTY PUBLIC UTILITIES
PINEHURST WELL NO. 24 AND
WELL NO. 8 REHABILITATION
PINEHURST, NORTH CAROLINA

Scale:	AS SHOWN
Date:	FEB. 2016
Drawn:	DC
Checked:	JCM
Job No.:	14020
Sheet No.:	13
Of: -	Version: 1

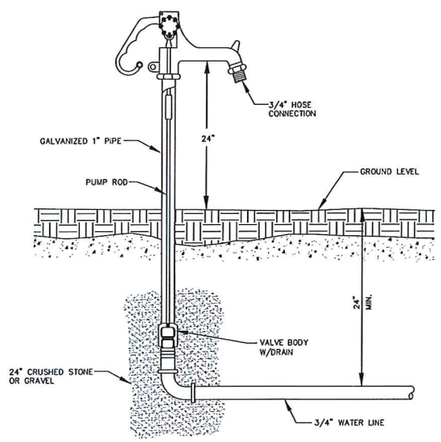

NON-FREEZE HYDRANT DETAIL
NO SCALE

NOTE:
ALL TAPS 2" AND SMALLER SHALL BE MADE WITH TAPPING SADDLE. ALL TAPS LARGER THAN 2" SHALL BE MADE WITH TAPPING SLEEVE AND VALVE. NO DIRECT TAPS SHALL BE MADE.

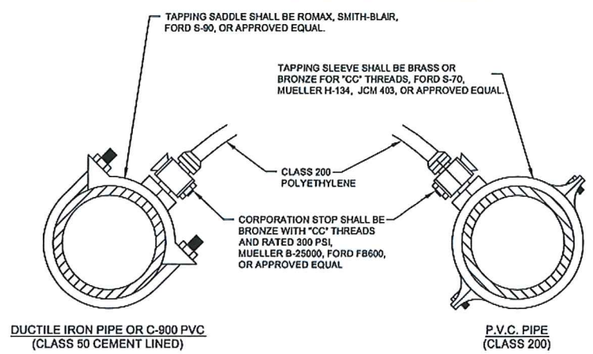

NOTE: ALL TAPS TO BE MADE ON TOP QUARTER OF MAIN.

STANDARD WATER TAP DETAIL
NO SCALE

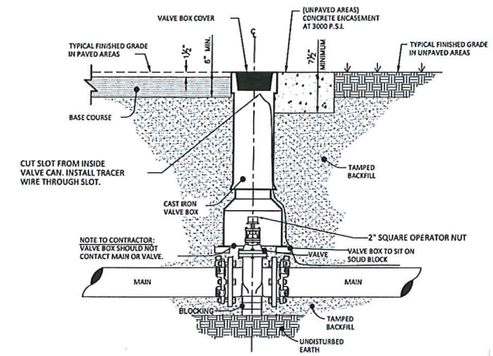

NOTES:
1. ONLY MANUFACTURED VALVE BOX EXTENSIONS SHALL BE ALLOWED.
2. VALVE OPERATING NUT MUST BE EXTENDED SO THAT THE DEPTH IS NO GREATER THAN 8' (ft.) FROM THE SURFACE USING A MANUFACTURER APPROVED EXTENSION KIT.
3. PRECAST CONCRETE ENCASEMENT IS ALLOWED OUTSIDE OF PAVED AREAS.
4. CONCRETE PROTECTOR RING MAY BE USED IN LIEU OF ENCASEMENT IN UNPAVED AREAS.
5. ALL GATE VALVES SHALL BE PLACED ON 4" THICK 8"X12" CONCRETE BLOCKS.

VALVE & BOX INSTALLATION DETAIL
NO SCALE

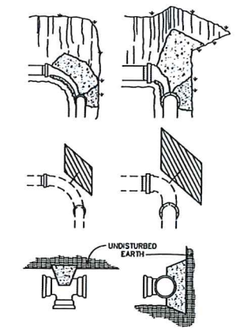

MINIMUM CONCRETE BLOCKING (C.Y.) *					
NOMINAL PIPE DIAMETER INCHES	TEES & DEAD ENDS	90° BEND	45° BEND	22½° BEND	11¼° BEND
4	0.1	0.1	0.1	0.1	0.1
6	0.2	0.2	0.1	0.1	0.1
8	0.2	0.3	0.2	0.1	0.1
10	0.3	0.5	0.3	0.2	0.2
12	0.4	0.6	0.5	0.3	0.3
14	0.7	0.9	0.6	0.5	0.5
16	0.7	0.9	0.6	0.5	0.5
18	0.9	1.2	0.7	0.6	0.6
20	1.1	1.6	1.1	0.7	0.7
24	1.7	2.3	1.6	0.9	0.9

NOTES:
1) ALL FITTINGS AND ACCESSORIES SHALL BE WRAPPED WITH 6 MIL POLYETHYLENE PRIOR TO POURING CONCRETE.
2) NO CONCRETE SHALL COVER ANY BOLTS OR NUTS.
3) POURED CONCRETE SHOULD BE ON THE DRY SIDE.
4) CONCRETE SHALL BE 3000 P.S.I. MIN.
5) ALL FITTINGS SHALL HAVE MEGA-LUGS OR GRIP RINGS AND APPROPRIATE CONCRETE BLOCKING; UNLESS APPROVED OTHER WISE.

THRUST BLOCKING DETAIL
NO SCALE

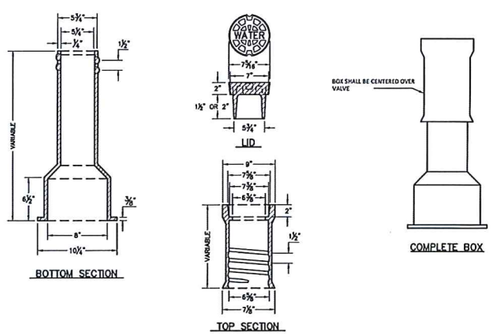

DIMENSIONS IN INCHES	
LENGTH	
TOP	BOTTOM
10	15
10	24
16	24
16	36
26	36
26	48
26	60

STANDARD VALVE BOX DETAIL
NO SCALE

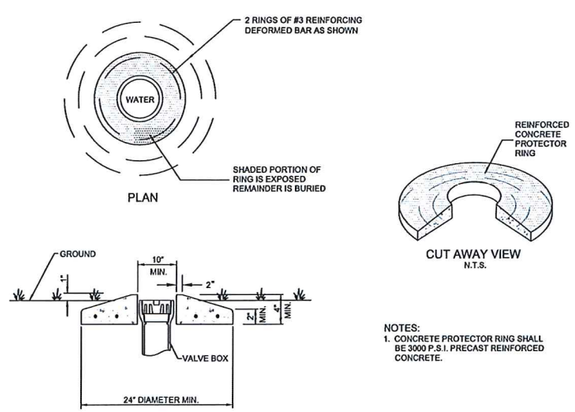

NOTES:
1. CONCRETE PROTECTOR RING SHALL BE 3000 P.S.I. PRECAST REINFORCED CONCRETE.

CONCRETE PROTECTOR RING DETAIL
NO SCALE

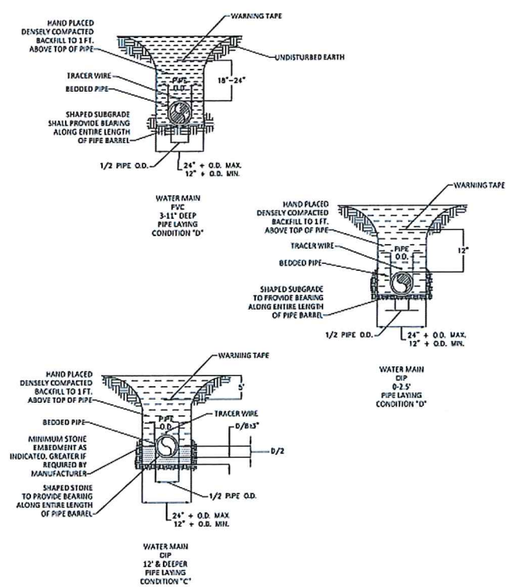

PIPE BEDDING DETAIL
NO SCALE

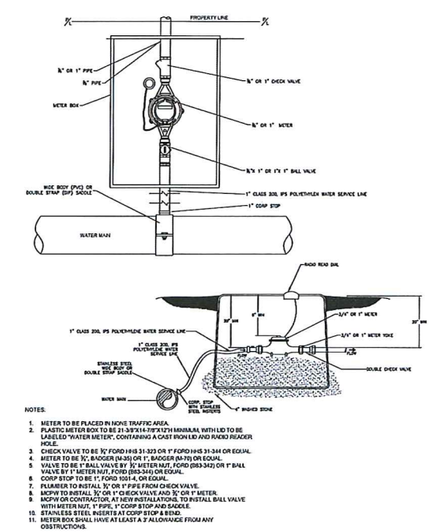

NOTES:
1. METER TO BE PLACED IN NONE TRAFFIC AREA.
2. PLASTIC METER BOX TO BE 21-3/8"X14-7/8"X21"H MINIMUM, WITH LID TO BE LABELED "WATER METER", CONTAINING A CAST IRON LID AND RADIO READER HOLE.
3. CHECK VALVE TO BE ¾" FORD H16-31-323 OR 1" FORD H16-31-344 OR EQUAL.
4. METER TO BE ¾", BADGER (M-35) OR 1", BADGER (M-70) OR EQUAL.
5. VALVE TO BE 1" BALL VALVE BY ¾" METER NUT, FORD (BB3-342) OR 1" BALL VALVE BY 1" METER NUT, FORD (BB3-344) OR EQUAL.
6. CORP STOP TO BE 1", FORD 100-4, OR EQUAL.
7. PLUMBER TO INSTALL ¾" OR 1" PIPE FROM CHECK VALVE.
8. MCPW TO INSTALL ¾" OR 1" CHECK VALVE AND ¾" OR 1" METER.
9. MCPW OR CONTRACTOR, AT NEW INSTALLATIONS, TO INSTALL BALL VALVE WITH METER NUT, 1" PIPE, 1" CORP STOP AND SADDLE.
10. STAINLESS STEEL INSERTS AT CORP STOP & BEND.
11. METER BOX SHALL HAVE AT LEAST A 3' ALLOWANCE FROM ANY OBSTRUCTIONS.

SINGLE 3/4" OR 1"WATER METER AND SERVICE DETAIL
NO SCALE

FINAL DRAWINGS
NOT FOR CONSTRUCTION

MBD CONSULTING ENGINEERS, P.A.
1300 SECOND AVENUE
SUITE 211
CONWAY, SC 29526
Phone: (843) 488-0124
Fax: (843) 488-0129

MISCELLANEOUS DETAILS

MOORE COUNTY PUBLIC UTILITIES
PINEHURST WELL NO. 24 AND
WELL NO. 8 REHABILITATION
PINEHURST, NORTH CAROLINA

Scale:	AS SHOWN
Date:	FEB. 2016
Drawn:	DC
Checked:	JCM
Job No.:	14020
Sheet No.:	14
Of: -	Version: 1

1. CLEARING AND GRUBBING THOSE AREAS NECESSARY FOR INSTALLATION OF PERIMETER CONTROLS.

2. INSTALLATION OF SEDIMENT BASINS AND TRAPS.

3. CONSTRUCTION OF PERIMETER CONTROLS.

4. REMAINING CLEARING AND GRUBBING.

5. ROAD GRADING.

6. GRADING FOR THE REMAINDER OF THE SITE.

7. CONSTRUCTION. PROTECT STORM DRAINS UNTIL AFTER COMPLETION OF CONSTRUCTION.

8. FINAL GRADING, LANDSCAPING AND STABILIZATION.

9. REMOVABLE OF SEDIMENT MEASURES.

SEEDBED PREPARATION

1. CHISEL COMPACTED AREAS AND SPREAD TOPSOIL 3 INCHES DEEP OVER ADVERSE SOIL CONDITIONS.
2. RIP THE ENTIRE AREA TO 6" DEPTH.
3. REMOVE ALL LOOSE ROCK, ROOTS AND OTHER OBSTRUCTIONS LEAVING SURFACE REASONABLY SMOOTH AND UNIFORM.
4. APPLY AGRICULTURAL LIME, FERTILIZER AND SUPER PHOSPHATE UNIFORMLY AND MIX WITH SOIL.
5. CONTINUE TILLAGE UNTIL A WELL-PULVERSIZED, FIRM REASONABLY UNIFORM SEEDBED IS PREPARED 4 TO 6 INCHES DEEP.
6. COVER SEED LIGHTLY WITH SEEDING EQUIPMENT OR CULTIPACK AFTER SEEDING.
7. MULCH IMMEDIATELY AFTER SEEDING.
8. INSPECT ALL SEEDED AREAS AND MAKE NECESSARY REPAIRS OR RESEED WITHIN THE PLANTING SEASON. IF STAND SHOULD BE OVER 60% DAMAGED, REESTABLISH FOLLOWING ORIGINAL LIME, FERTILIZER AND SEEDING RATES.
9. FERTILIZER SHALL BE APPLIED AT THE RATE OF 1000 POUNDS PER ACRE.
10. LIME SHALL BE APPLIED AT THE RATE OF 3000 POUNDS PER ACRE.
11. PERMANENT VEGETATION:

    A. SUMMER (MARCH 1 - AUGUST 14)

    COMMON BERMUDA (HULLED) 25 lbs./ACRE
    GERMAN MILLET 10 lbs./ACRE

    B. WINTER (AUGUST 15 - FEBRUARY 28)

    ANNUAL RYE 40 lbs./ACRE
    COMMON BERMUDA (UNHULLED) 30 lbs./ACRE

12. RYE GRAIN AND MILLET SHALL BE ADDED IN ORDER TO ESTABLISH QUICK GROUND COVER FOR EROSION CONTROL PURPOSES.
13. TEMPORARY VEGETATION:

    A. (APRIL 1 - AUGUST 15)

    ANNUAL SUDAN GRASS (SWEET OF TIFF) 40 lbs./ACRE
    BROWN TOP MILLET 50 lbs./ACRE

    B. (AUGUST 15 - MARCH 1)

    RYE GRAIN 55 lbs./ACRE

14. OAT GRAIN IS TO BE ADDED IF SEEDING DATE IS BETWEEN MARCH 1 AND APRIL 16, AT THE RATE OF 10 POUNDS PER ACRE.
15. OTHER PLANTINGS OR SEEDING AS CONTAINED IN THE CRITICAL AREA STABILIZATION SECTION OF SCS HANDBOOK "EROSION AND SEDIMENT CONTROL IN DEVELOPING AREAS" MAY BE USED PROVIDED THE WORK COMPLIES WITH ALL APPLICABLE SPECIFICATIONS CONTAINED IN SCS HANDBOOK.
16. CONSULT CONSERVATION INSPECTOR ON MAINTENANCE AND FERTILIZATION AFTER PERMANENT COVER IS ESTABLISHED.

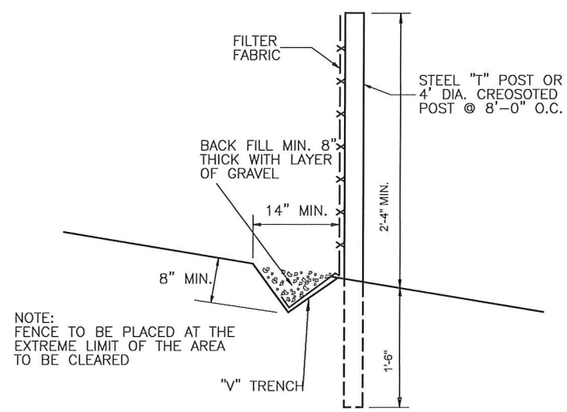

TEMPORARY SILT FENCE
NO SCALE

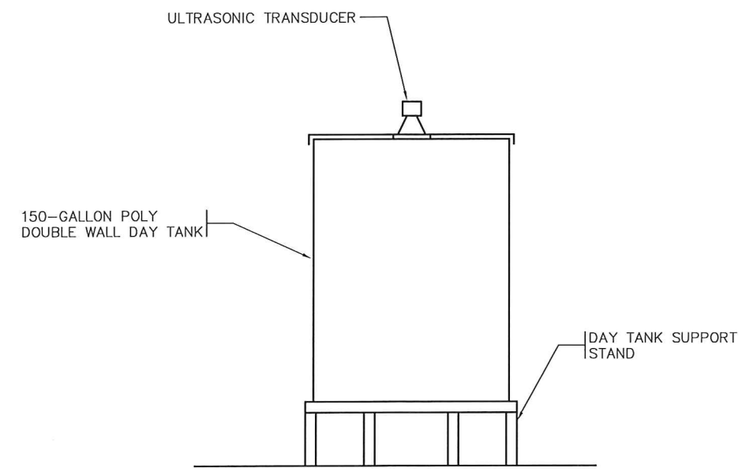

150-GALLON POLY DOUBLE-WALL VERTICAL TANK AND FIBERGLASS STAND
NO SCALE

NOTES:

1. SEE SPECIFICATIONS FOR TANK REQUIREMENTS.
2. TANK STAND SHALL ELEVATE TANK 12" MINIMUM.

FINAL DRAWINGS
NOT FOR CONSTRUCTION

NORTH CAROLINA PROFESSIONAL ENGINEER SEAL 025942 DJ. CHARLES JOHNSON 2-22-16

MBJ CONSULTING ENGINEERS, P.A.
1300 SECOND AVENUE
SUITE 211
CONWAY, SC 29526
Phone: (843) 488-0124
Fax: (843) 488-0129

EROSION CONTROL & MISCELLANEOUS NOTES & DETAILS

MOORE COUNTY PUBLIC UTILITIES
PINEHURST WELL NO. 24 AND WELL NO. 8 REHABILITATION
PINEHURST, NORTH CAROLINA

Scale:	AS SHOWN
Date:	FEB. 2016
Drawn:	DC
Checked:	JCM
Job No.:	14020
Sheet No.:	15
Of: -	Version: 1

ONE-LINE DIAGRAM LEGEND

1500KVA
2.4KV : 480Y/277
3-P, 60HZ

TRANSFORMER WITH KVA RATING, PRIMARY AND SECONDARY VOLTAGES, NUMBER OF PHASES, AND FREQUENCY.

20 — 22: 3#8,#10G,2"

CIRCUIT NO.22 WITH #8 INSULATED CONDUCTORS, 1#10 BARE GROUND WIRE ALL IN 2" CONDUIT TO 20 HP MOTOR.

15 — AUXILIARY ITEMS MAY NOT BE SHOWN COMPLETELY

ONE-LINE SHOWING POWER AND CONTROL TO A PACKAGE UNIT. AS FOR EXAMPLE A STEAM GENERATOR OR AN AIR HANDLING UNIT, SHALL IMPLY THAT ANY AND ALL ASSOCIATED EQUIP-MENT SHALL ALSO BE INSTALLED AND WIRED AS REQUIRED BY THE EQUIPMENT FURNISHED.

INDICATES THAT ALL OR PART OF CIRCUIT MAY BE ROUTED IN DUCT BANK OR UNDERGROUND. CONDUIT SIZE SHOWN ON ONE-LINE IS ABOVE GROUND AND/OR INSIDE OF STRUCTURE. SEE DUCT BANK SCHEDULE AND SECTIONS FOR CONDUIT SIZE OF UNDERGROUND PORTION OF CIRCUIT.

SSRV — SOLID STATE REDUCED VOLTAGE MOTOR STARTER

HIGH VOLTAGE DRAWOUT AIR OR VACUUM CIRCUIT BREAKER

3P-20 — LOW VOLTAGE AIR CIRCUIT BREAKER, 3 POLE, 20 AMPERE

S4 — SIZE 4 COMBINATION MAGNETIC MOTOR STARTER

LOW VOLTAGE DRAWOUT AIR CIRCUIT BREAKER

HIGH VOLTAGE DRAWOUT CONTACTOR

FUSE AND DISCONNECT SWITCH

S2 — SIZE 2 COMBINATION MAGNETIC MOTOR STARTER, REVERSING OR 2 SPEED

AFD — ADJUSTABLE FREQUENCY DRIVE WITH OUTPUT CONTACTOR

POTENTIAL TRANSFORMER

CURRENT TRANSFORMER

CONDUIT & WIRING INSTALLATION LEGEND

CONDUIT TURNING UP. CONDUIT TURNING DOWN.

CONDUIT PLUGGED FLUSH. CONDUIT CAPPED.

SHORT DASH FOR EACH PHASE CONDUCTOR. LONG DASH FOR NEUTRAL CONDUCTOR. CIRCULAR DASH FOR GROUND WIRE.

L2-5 — TYPICAL FOR HOME RUN TO BE ROUTED TO LIGHTING PANEL L2 & CONNECTED TO CIRCUIT #5

A — LIGHTING FIXTURE. REFER TO NUMBER OR LETTER IN FIXTURE SCHEDULE

6 — DIRECTION INDICATED FOR DIRECTIONAL FIXTURE

FLUORESCENT FIXTURE. REFER TO NUMBER OR LETTER IN FIXTURE SCHEDULE.

E — E — CONCRETE ENCASED ELECTRICAL CONDUIT

EE — EE — DIRECT BURIED ELECTRICAL CONDUIT

CONCEALED CONDUIT

GROUND CONDUCTOR

3-1PR#16SH	THREE, SINGLE PAIR, TWISTED, SHIELDED #16 AWG CABLE
3#16STP	THREE, SINGLE PAIR, TWISTED, SHIELDED #16 AWG CABLE
3-7/C#14	THREE, SINGLE, SEVEN CONDUCTOR #14 AWG MULTICONDUCTOR CONTROL CABLES
2-RS485	TWO CABLES FOR RS485 COMMUNICATION

ABBREVIATIONS

A	AMBER, AMPERE, ALARM
AC	ALTERNATING CURRENT
ACB	AIR CIRCUIT BREAKER
AFD	ADJUSTABLE FREQUENCY DRIVE
AM	AMMETER
ANN	ANNUNCIATOR
AR	ALARM RELAY
AS	AMMETER SWITCH
AWG	AMERICAN WIRE GAGE
BC	BATTERY CHARGER
BR	BRAKE
BT	BEARING TEMPERATURE
C	CLOSE, COUNTER OR CONTACTOR
CAP	CAPACITOR
CB	CIRCUIT BREAKER
CB"A"	CIRCUIT BREAKER AUXILIARY CONTACT (OPEN WHEN BREAKER IS OPEN AND CLOSED WHEN BREAKER IS CLOSED OR TRIPPED)
CB"B"	CIRCUIT BREAKER AUXILIARY CONTACT (CLOSED WHEN BREAKER IS OPEN AND OPEN WHEN BREAKER IS CLOSED OR TRIPPED)
CF	CHLORINE FEEDER
CFCP	CHLORINE FEED CONTROL PANEL
CI	CELL INTERLOCK
CKT	CIRCUIT
CL2	CHLORINE
COS	CABLE OPERATED SWITCH
CP	CONTROL PANEL
CPT	CONTROL POWER TRANSFORMER
CR	CURRENT OR CONTROL RELAY
CS	CONTROL STATION
CT	CYCLE TIMER OR CURRENT TRANSFORMER
CTC	CYCLE TIMER CLUTCH
CTM	CYCLE TIMER MOTOR
2/C	2 CONDUCTOR
4"C	4" CONDUIT
DC	DIRECT CURRENT
DBR	DEAD BUS RELAY
DM	DAMPER MOTOR OR DEMAND METER
DPDT	DOUBLE POLE DOUBLE THROW
DPST	DOUBLE POLE SINGLE THROW
DPR	DIFFERENTIAL PRESSURE REGULATOR
DPS	DIFFERENTIAL PRESSURE SWITCH
DS	DISCONNECT SWITCH
DSLC	DIGITAL SEQUENCING LOAD CONTROLLER
DVR	DIGITAL VOLTAGE REGULATOR
EC	EMPTY CONDUIT
EF	EXHAUST FAN
EHH	ELECTRICAL HAND HOLE
EL	ELEVATION OR EMERGENCY LIGHT
EMH	ELECTRICAL MANHOLE
ES	END SWITCH OR EMERGENCY STOP
ETI	ELAPSED TIME INDICATOR
ETM	ELAPSED TIME METER
F	FORWARD
FCS	FREQUENCY CONTROL SWITCH
FIT	FLOW INDIATING TRANSMITTER
FQ	FLOW TOTALIZER
FQI	FLOW TOTALIZING INDICATOR
G	GREEN OR GROUND
GD	GROUND DETECTOR
GEN	GENERATOR
GFI	GROUND FAULT INTERRUPTER
GLS	GEARED LIMIT SWITCH
#8G	#8 GROUND WIRE
H	HIGH OR HUMIDISTAT
HC	HOT CIRCUIT
HH	HANDHOLE
HMT	HIGH MOTOR TEMPERATURE
HOA	HAND-OFF-AUTO
HOR	HAND-OFF-REMOTE
HP	HORSEPOWER
HWCO	HIGH WATER CUTOFF
HZ	HERTZ (CYCLE)
I/O	INPUT/OUTPUT
IPCP	INFLUENT PUMP CONTROL PANEL
J	JUNCTION BOX
JB	JUNCTION BOX
K	KEY INTERLOCK
KV	KILOVOLT
KVA	KILOVOLT AMPERE
KVAR	KILOVAR
KW	KILOWATT
KWH	KILOWATT HOUR
L	LOW, LEVEL
LA	LIGHTNING ARRESTER
LC	LIGHTING CONTACTOR
LE	LEVEL ELEMENT
LIT	LEVEL INDICATING TRANSMITTER
LOR	LOCAL-OFF-REMOTE
LS	LIMIT OR LEVEL SWITCH
LSI	LONG, SHORT, & INSTANTANEOUS TRIP UNIT
LSIG	LONG, SHORT, INST., & GROUND FAULT TRIP UNIT
LWCO	LOW WATER CUTOFF
M	MAGNETIC MOTOR STARTER
MA	MILLIAMPERE
MCC	MOTOR CONTROL CENTER
MCLU	MOTOR CONTROL LINEUP
MCM	THOUSAND CIRCULAR MIL
MD	MOISTURE DETECTOR
MFM	MAGNETIC FLOW METER
MFR	MANUFACTURER
MH	MANHOLE OR MOUNTING HEIGHT
MOV	MOTOR OPERATED VALVE
MS	MANUAL MOTOR STARTER
MSH	MOTOR SPACE HEATER
MV	MILLIVOLT
MVA	MEGA VOLT AMPERE
N	NEUTRAL
NC	NORMALLY CLOSED
NO	NORMALLY OPEN, NUMBER
O	OPEN
OIT	OPERATOR INTERFACE TERMINAL
OL	OVERLOAD
P	PRIMARY
PB	PUSH BUTTON OR PULL BOX
PC	PROGRAMMABLE CONTROLLER
PDP	POWER DISTRIBUTION PANEL
PF	PROPELLER FAN
PFM	POWER FACTOR METER
PH	PHASE, CHEMICAL TERM
PLC	PROGRAMMABLE LOGIC CONTROLLER
PMG	PERMANENT MAGNET GENERATOR
PS	PRESSURE SWITCH
PT	POTENTIAL TRANSFORMER, PROGRAM TIMER
2P	2 POLE
R	RED, RAISE, RELAY OR REVERSE
RECP	RECEPTACLE
RES	RESISTOR
RT	REPEATING TIMER
RTD	RESISTANCE TYPE TEMP DETECTOR
RTU	REMOTE TERMINAL UNIT
RVAT	REDUCED VOLTAGE AUTO-TRANSFORMER TYPE
S2	SIZE 2 STARTER
SB/I	SIGNAL BOOSTER/ISOLATOR
SCP	SYSTEM CONTROL PANEL
SH	SPACE HEATER
SN	SOLID NEUTRAL
SMS	RUN-PERM-CHECK-OFF SELECTOR SWITCH
SP	SURGE PROTECTOR
SPDT	SINGLE POLE DOUBLE THROW
SPST	SINGLE POLE SINGLE THROW
SS	SELECTOR SWITCH
SSRV	SOLID STATE REDUCED VOLTAGE
SSM	SOLID STATE METER
STP	SHIELDED TWISTED PAIR
SUPV	SUPERVISORY CONTROL
SV	SOLENOID VALVE
SWBD	SWITCHBOARD
SWGR	SWITCHGEAR
T	THERMOSTAT, TIMER, OR TOTALIZER
TACH	TACHOMETER
TB	TERMINAL BLOCK
TC	TIMER CLUTCH
TD	TIME DELAY RELAY
TEMP	TEMPERATURE
TM	TIMER MOTOR
TQ	TORQUE
TS	TORQUE OR TEMPERATURE SWITCH
TTB	TELEPHONE TERMINAL BOX
UG	UNDERGROUND
UV	UNDER VOLTAGE
UPS	UNINTERRUPTIBLE POWER SUPPLY
V	VOLTS
VA	VOLT AMPERE
VAR	VARMETER
VCS	VOLTAGE CONTROL SWITCH
VFR	VOLTAGE/FREQUENCY RELAY
VM	VOLTMETER
VS	VOLTMETER SWITCH
W	WHITE OR WATTS
WH	WATTHOUR METER
WM	WATT METER
WP	WEATHERPROOF
X	AUXILIARY RELAY
XFMR	TRANSFORMER
XP	EXPLOSION PROOF
Y	YELLOW
Z	AUXILIARY RELAY
ZS	POSITION SWITCH

SCHEMATIC SYMBOLS

WIRE INTERSECTION POINT

EXTERNAL CONNECTION POINT

NORMALLY OPEN CONTACT

NORMALLY CLOSED CONTACT

STARTER, CONTACTOR OR RELAY COIL

NORMALLY OPEN PUSH BUTTON

NORMALLY CLOSED PUSH BUTTON

MAINTAINED PUSH BUTTON

NORMALLY CLOSED GEARED LIMIT SWITCH

NORMALLY OPEN GEARED LIMIT SWITCH

FLOAT SWITCH (CLOSING ON RISING LEVEL)

FLOAT SWITCH (OPENING ON RISING LEVEL)

P — PRESSURE SWITCH (CLOSING ON RISING PRESSURE)

P — PRESSURE SWITCH (OPENING ON RISING PRESSURE)

V — VACUUM SWITCH (CLOSING ON INCREASING VACUUM)

V — VACUUM SWITCH (OPENING ON INCREASING VACUUM)

TEMPERATURE SWITCH (CLOSING ON RISING TEMPERATURE)

TEMPERATURE SWITCH (OPENING ON RISING TEMPERATURE)

FLOW ACTUATED SWITCH (CLOSING ON INCREASE IN FLOW)

FLOW ACTUATED SWITCH (OPENING ON INCREASE IN FLOW)

ON TIME DELAY SWITCH (NORMALLY OPEN WITH TIME DELAY CLOSING AFTER COIL IS ENERGIZED)

OFF TIME DELAY SWITCH (NORMALLY OPEN WITH TIME DELAY OPENING AFTER COIL IS DE-ENERGIZED)

ON TIME DELAY SWITCH (NORMALLY CLOSED WITH TIME DELAY OPENING AFTER COIL IS ENERGIZED)

OFF TIME DELAY SWITCH (NORMALLY CLOSED WITH TIME DELAY CLOSING AFTER COIL IS DE-ENERGIZED)

TORQUE SWITCH (NORMALLY OPEN)

TORQUE SWITCH (NORMALLY CLOSED)

LIMIT SWITCH (NORMALLY OPEN)

LIMIT SWITCH (NORMALLY OPEN, HELD CLOSED)

INDICATING LIGHT

FUSE

POTENTIOMETER

CAPACITOR

DIODE

RESISTOR

CONTROL POWER TRANSFORMER

SWITCH

MS — MANUAL STARTER

OL — OVERLOAD

ELECTRODE

LIMIT SWITCH (NORMALLY CLOSED)

LIMIT SWITCH (NORMALLY CLOSED, HELD OPEN)

DIFFERENTIAL PRESSURE SWITCH (NORMALLY OPEN, CLOSING ON INCREASING DIFF.)

DIFFERENTIAL PRESSURE SWITCH (NORMALLY CLOSED, OPENING ON INCREASING DIFF.)

SWITCH & OUTLET SYMBOLS

S	SINGLE POLE SWITCH	1	DUPLEX RECEPTACLE 120 VOLT, TYPICAL CIRCUIT NUMBER NOTED
S2	TWO POLE SWITCH		CLOCK RECEPTACLE
S3	THREE-WAY SWITCH		RANGE RECEPTACLE
S4	FOUR-WAY SWITCH		TWISTLOCK RECEPTACLE
SM	MOMENTARY SWITCH	30	240V, 1-PH RECEPTACLE, TYPICAL AMPERE RATING NOTED
SWP	WEATHERPROOF SWITCH	60	480V, 3-PH WELDING RECEPTACLE, TYPICAL AMPERE RATING NOTED
SP	SWITCH WITH PILOT LIGHT		COMBINATION 120V, 240 VOLT SPECIAL RECEPTACLE FOR LABORATORY EQUIPMENT
SK	KEY OPERATED SWITCH		DUPLEX FLOOR OUTLET
SH	HAZARDOUS AREA SWITCH		TELEPHONE OUTLET
SD	DIMMER SWITCH		TELEPHONE FLOOR OUTLET
		CX	COAXIAL CABLE OUTLET

MISCELLANEOUS SYMBOLS

BELL	DISCONNECT SWITCH
HORN	COMBINATION STARTER
BUZZER	POWER PANEL
UNIT HEATER	LIGHTING PANEL
THERMOSTAT	MISCELLANEOUS PANEL
JUNCTION BOX	LIGHTING CONTACTOR
GROUND ROD	
GROUND CONNECTION	

GENERAL NOTES

1. SOLID LINES (———) INDICATE NEW WORK OR EQUIPMENT.
2. SCREENED LINES (————) INDICATE EXISTING WORK OR EQUIPMENT.
3. DASHED LINES (— —) INDICATE FUTURE WORK OR EQUIPMENT.
4. THIS IS A GENERAL LEGEND SHEET. SOME SYMBOLS AND ABBREVIATIONS MAY NOT BE UTILIZED ON THIS SPECIFIC PROJECT.
5. UNDERGROUND DUCT BANKS PASSING UNDER ROADS SHALL BE CONCRETE ENCASED A MINIMUM OF 5' PAST EACH EDGE OF THE ROAD.
6. CONTRACTOR SHALL FIELD ROUTE UNDERGROUND DUCT BANK TO AVOID EXISTING EQUIPMENT.
7. CONTRACTOR SHALL BE RESPONSIBLE FOR ROUTING ANY NEW CONDUITS. THIS INCLUDES CONDUITS ON ONE-LINES AND HOMERUNS ON PLANS. CABLE AND CONDUIT MAY NOT ALWAYS BE SHOWN ON PLAN SHEETS.
8. SEE SPECIFICATIONS FOR SEQUENCE OF CONSTRUCTION AND OUTAGE RESTRICTIONS.
9. SEE SPECIFICATIONS FOR BREAKDOWN OF ITEMS IN THE BASE BID AND ALTERNATES.
10. HATCHED AREAS (▨) ON ONE-LINES AND ELEVATIONS INDICATE EQUIPMENT TO BE REMOVED BY THE CONTRACTOR.

FINAL DRAWINGS
NOT FOR CONSTRUCTION

STURGILL ENGINEERING P.A. C-3017
ONE SOUTH MAIN ST.
LEXINGTON, NC 27292
(336) 238-1240 PH.
(336) 236-6393 FAX

STURGILL ENGINEERING, P.A. C-1210 PROFESSIONAL ENGINEERING NOT TRANSFERABLE

NORTH CAROLINA SEAL 16871 ENGINEER RANDALL W. STURGILL
02/25/16

MBD CONSULTING ENGINEERS, P.A.
1300 SECOND AVENUE
SUITE 211
CONWAY, SC 29526
Phone: (843) 488-0124
Fax: (843) 488-0129

ELECTRICAL LEGEND, ABBREVIATIONS AND NOTES

MOORE COUNTY PUBLIC UTILITIES
PINEHURST WELL NO. 24 AND
WELL NO. 8 REHABILITATION
PINEHURST, NORTH CAROLINA

Scale:	AS SHOWN
Date:	SEPT. 2015
Drawn:	REH
Checked:	RWS
Job No.:	14020
Sheet No.:	E1
Of:	-
Version:	1

DRAWING NAME: \\SERVER\Engineering\MBD Consulting Engineers, PA\Moore Co. Public Utilities Well #24 & #8\ELEC DWGs\E1 LEGEND.dwg - .00 Feb 25, 2016 - 4:29pm

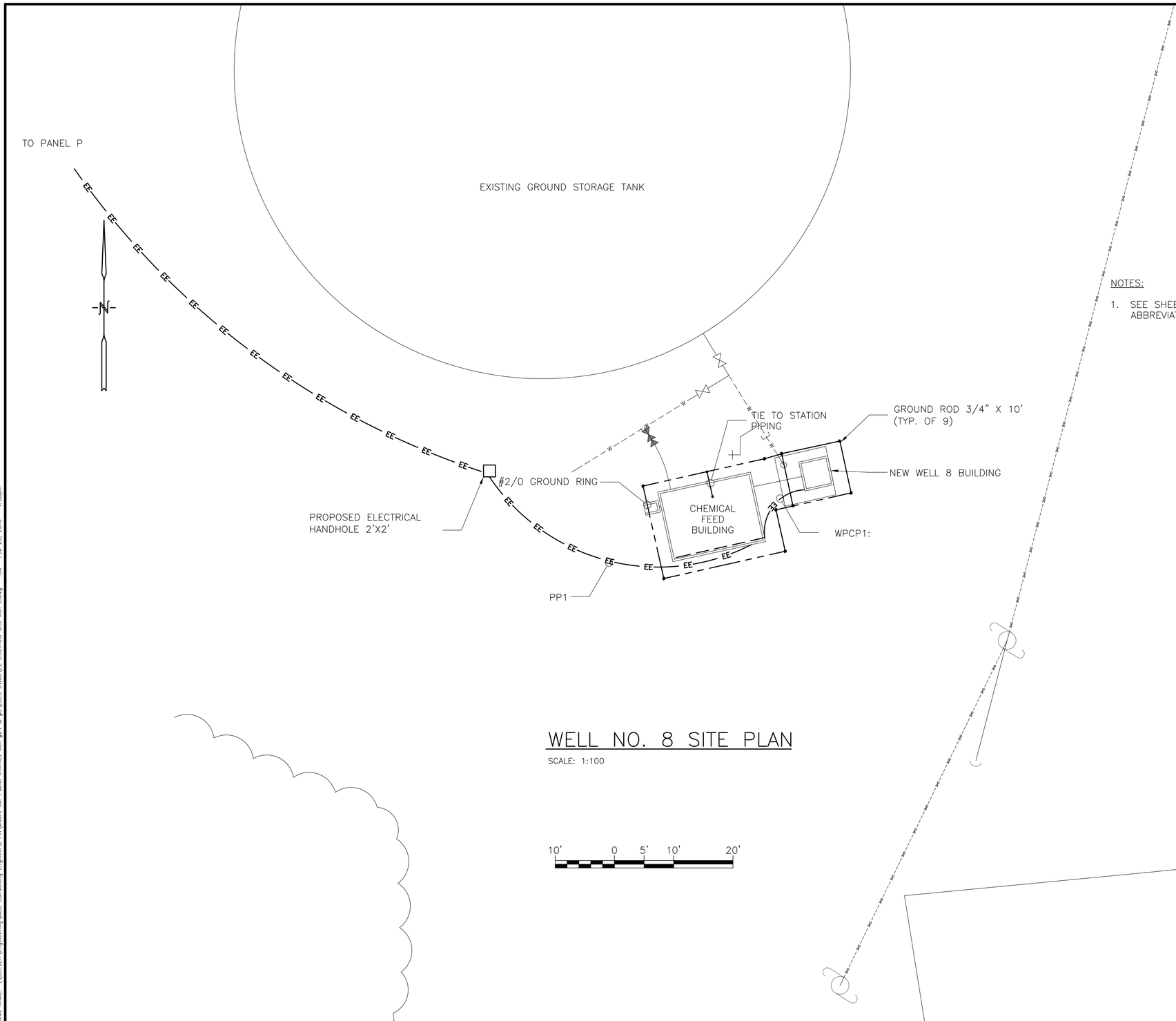

WELL NO. 8 SITE PLAN

SCALE: 1:100

NOTES:

1. SEE SHEET E1 FOR ELECTRICAL LEGEND, ABBREVIATIONS AND GENERAL NOTES.

FINAL DRAWINGS
NOT FOR CONSTRUCTION

STURGILL ENGINEERING P.A. C-3617
ONE SOUTH MAIN ST.
LEXINGTON, NC 27292
(336) 238-1240 PH.
(336) 236-6393 FAX

STURGILL ENGINEERING, P.A. C-1210 PROFESSIONAL ENGINEERING NOT TRANSFERABLE

NORTH CAROLINA SEAL 16871 ENGINEER RANDALL W. STURGILL

02/25/16

MBD CONSULTING ENGINEERS, P.A.
1300 SECOND AVENUE
SUITE 211
CONWAY, SC 29526
Phone: (843) 488-0124
Fax: (843) 488-0129

WELL 8 ELECTRICAL SITE PLAN

MOORE COUNTY PUBLIC UTILITIES
PINEHURST WELL NO. 24 AND
WELL NO. 8 REHABILITATION
PINEHURST, NORTH CAROLINA

Scale:	AS SHOWN
Date:	SEPT. 2015
Drawn:	REH
Checked:	RWS
Job No.:	14020
Sheet No.:	E2
Of: -	Version: 1

DRAWING NAME: \\SERVER\Engineering\MBD Consulting Engineers, PA\Moore Co. Public Utilities Well #24 & #8\ELEC DWGs\E2 Electrical Site Well 8.dwg – .00 Feb 25, 2016 – 4:30pm

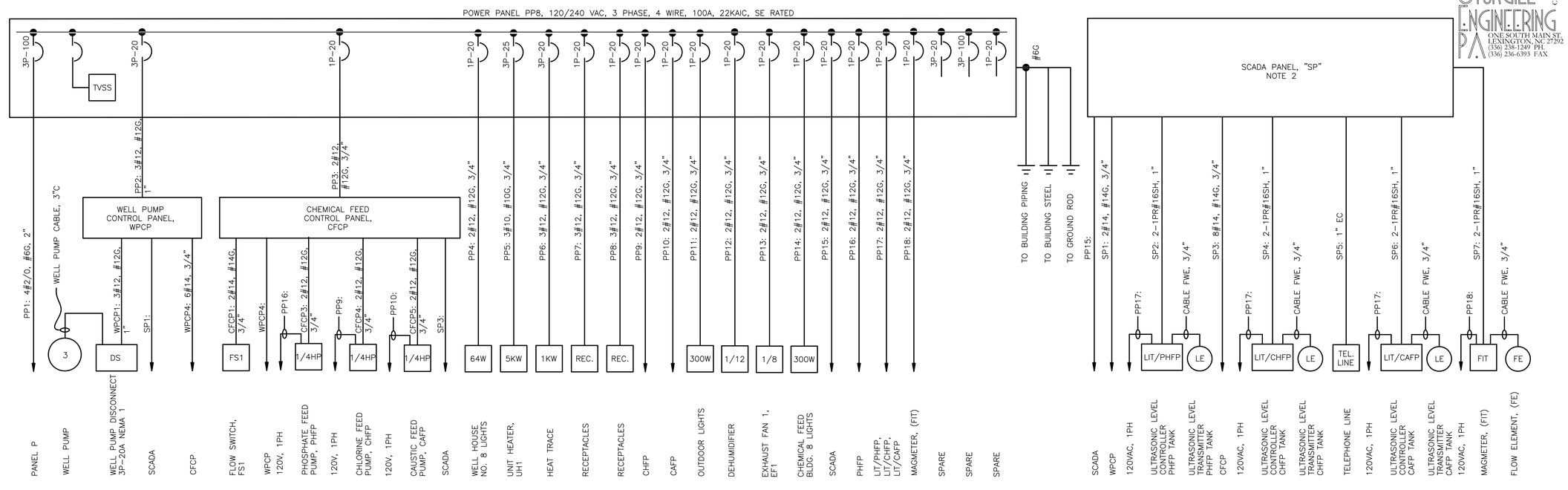

SYSTEM ONE-LINE DIAGRAM

NO SCALE

NOTES:

1. SEE SHEET E1 FOR ELECTRICAL LEGEND AND ABBREVIATIONS AND GENERAL NOTES.
2. SCADA PROVIDED BY OWNER, AND INSTALLED BY ELECTRICAL CONTRACTOR.

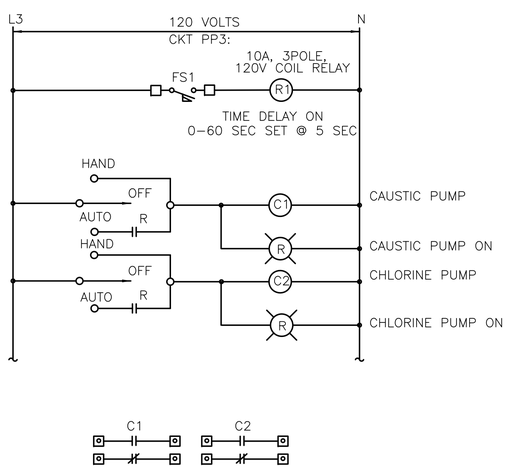

CHEMICAL FEED CONTROL PANEL, CFCP

NO SCALE (C1, C2, CONTACTS RATED FOR MOTOR SWITCHING, 1/2HP AT 120VAC.)

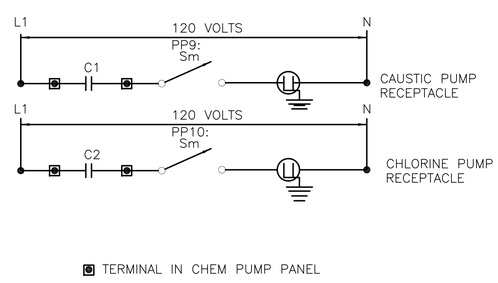

WELL CHEMICAL PUMP WIRING SCHEMATIC

NO SCALE

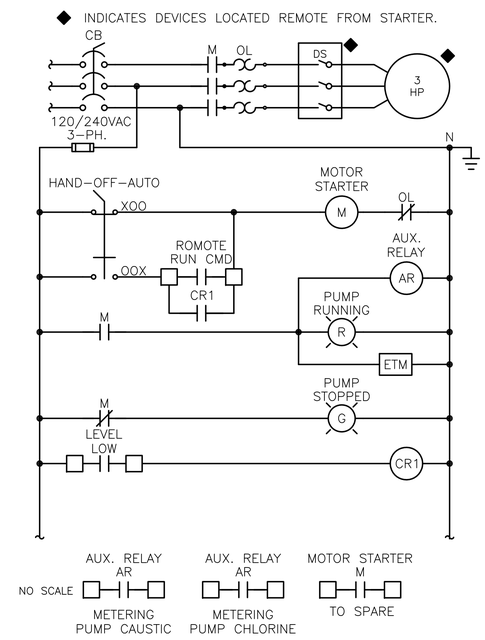

NO SCALE

WELL PUMP CONTROL SCHEMATIC

(AR CONTACTS RATED FOR MOTOR SWITCHING, 2A AT 120VAC.)

FINAL DRAWINGS
NOT FOR CONSTRUCTION

STURGILL ENGINEERING P.A.
C-3617
ONE SOUTH MAIN ST.
LEXINGTON, NC 27292
(336) 238-1240 PH.
(336) 236-6393 FAX

STURGILL ENGINEERING, P.A.
PROFESSIONAL ENGINEERING
C-1210
NOT TRANSFERABLE

NORTH CAROLINA
SEAL
16871
ENGINEER
RANDALL W. STURGILL
02/25/16

MBD CONSULTING ENGINEERS, P.A.
1300 SECOND AVENUE
SUITE 211
CONWAY, SC 29526
Phone: (843) 488-0124
Fax: (843) 488-0129

WELL 8 ELECTRICAL
ONE-LINE AND SCHEMATICS

MOORE COUNTY PUBLIC UTILITIES
PINEHURST WELL NO. 24 AND
WELL NO. 8 REHABILITATION
PINEHURST, NORTH CAROLINA

Scale:	AS SHOWN
Date:	SEPT. 2015
Drawn:	REH
Checked:	RWS
Job No.:	14020
Sheet No.:	E3
Of:	-
Version:	1

DRAWING NAME: \\SERVER\Engineering\MBD Consulting Engineers, PA\Moore Co. Public Utilities Well #24 & #8\ELEC DWGs\E3 Electrical One-line Well 8.dwg – .00 Feb 25, 2016 – 4:35pm

NOTES:

1. SEE SHEET E1 FOR ELECTRICAL LEGEND, ABBREVIATIONS AND GENERAL NOTES.

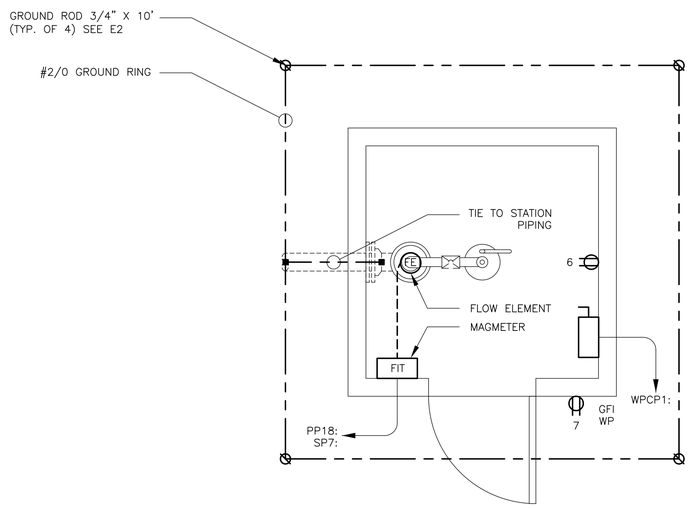

WELL NO. 8 POWER PLAN

SCALE: 3/4"=1'-0"

1' 6" 0 1' 2'

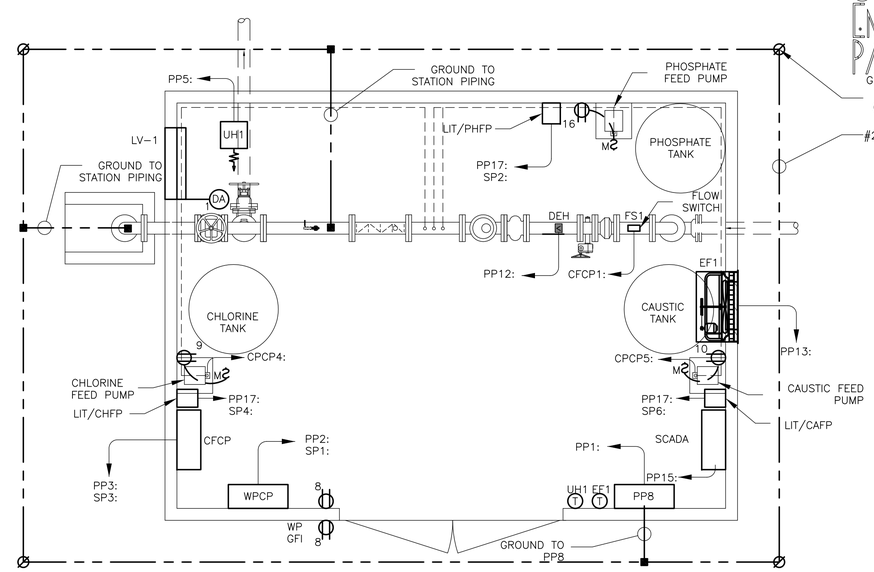

CHEMICAL FEED BLDG. 8 POWER PLAN

SCALE: 1/2"=1'-0"

2' 1' 0 2'

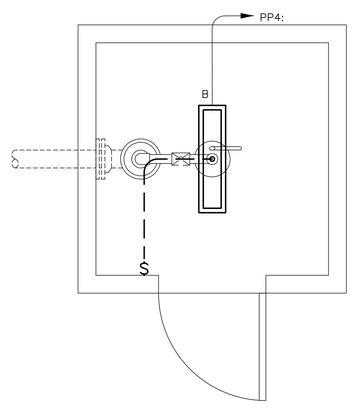

WELL NO. 8 LIGHTING PLAN

SCALE: 3/4"=1'-0"

1' 6" 0 1' 2'

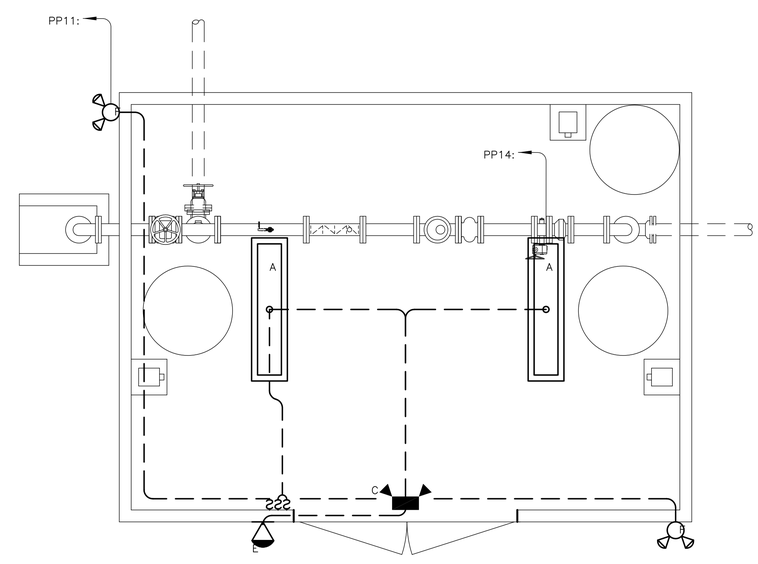

CHEMICAL FEED BLDG. 8 LIGHTING PLAN

SCALE: 1/2"=1'-0"

2' 1' 0 2'

FINAL DRAWINGS
NOT FOR CONSTRUCTION

STURGILL ENGINEERING PA
C-3617
ONE SOUTH MAIN ST.
LEXINGTON, NC 27292
(336) 238-1249 PH.
(336) 236-6393 FAX

STURGILL ENGINEERING, PA
PROFESSIONAL ENGINEERING CORPORATION
C-1210

NORTH CAROLINA
SEAL 16871
ENGINEER
RANDALL W. STURGILL
02/25/16

MBD CONSULTING ENGINEERS, P.A.
1300 SECOND AVENUE
SUITE 211
CONWAY, SC 29526
Phone: (843) 488-0124
Fax: (843) 488-0129

WELL 8 ELECTRICAL LIGHTING AND POWER

MOORE COUNTY PUBLIC UTILITIES
PINEHURST WELL NO. 24 AND
WELL NO. 8 REHABILITATION
PINEHURST, NORTH CAROLINA

Scale:	AS SHOWN
Date:	SEPT. 2015
Drawn:	REH
Checked:	RWS
Job No.:	14020
Sheet No.:	E4
Of:	-
Version:	1

DRAWING NAME: \\SERVER\Engineering\MBD Consulting Engineers, PA\Moore Co. Public Utilities Well #24 & #8\ELEC DWGs\E4 Electrical Lighting & Power Well 8.dwg - .00 Feb 25, 2016 - 4:39pm

STURGILL ENGINEERING P.A.
C-3617
ONE SOUTH MAIN ST.
LEXINGTON, NC 27292
(336) 238-1249 PH.
(336) 236-6393 FAX

STURGILL ENGINEERING, P.A.
PROFESSIONAL ENGINEERING CORPORATION
C-1210

NORTH CAROLINA
SEAL
16871
ENGINEER
RANDALL W. STURGILL
02/25/16

MBD CONSULTING ENGINEERS, P.A.
1300 SECOND AVENUE
SUITE 211
CONWAY, SC 29526
Phone: (843) 488-0124
Fax: (843) 488-0129

WELL NO. 24 SITE PLAN

MOORE COUNTY PUBLIC UTILITIES
PINEHURST WELL NO. 24 AND
WELL NO. 8 REHABILITATION
PINEHURST, NORTH CAROLINA

Scale:	AS SHOWN
Date:	SEPT. 2015
Drawn:	REH
Checked:	RWS
Job No.:	14020
Sheet No.:	E5
Of:	-
Version:	1

NOTES:

1. SEE SHEET E1 FOR ELECTRICAL LEGEND, ABBREVIATIONS AND GENERAL NOTES.

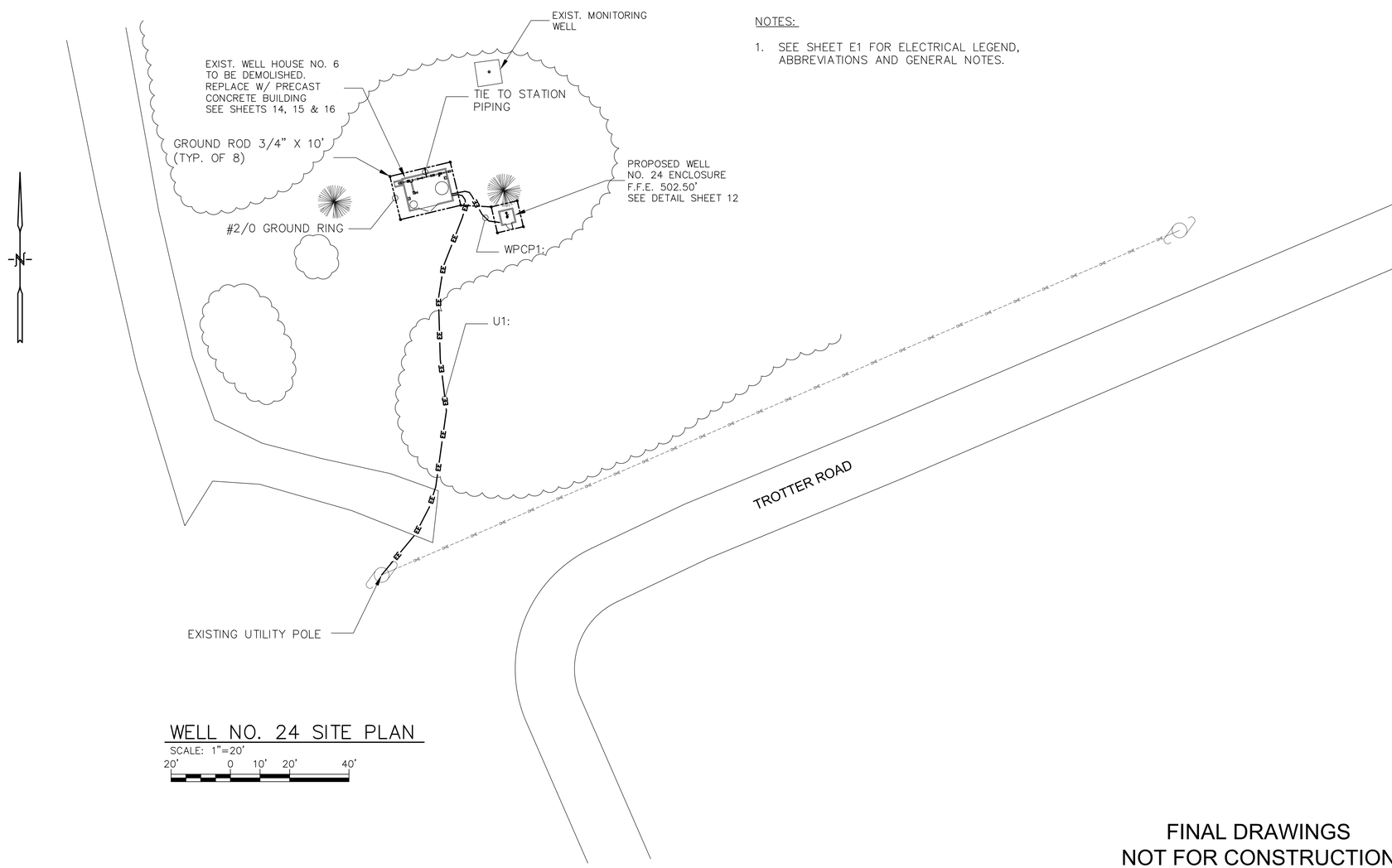

WELL NO. 24 SITE PLAN
SCALE: 1"=20'
20' 0 10' 20' 40'

FINAL DRAWINGS
NOT FOR CONSTRUCTION

DRAWING NAME: \\SERVER\Engineering\MBD Consulting Engineers, PA\Moore Co. Public Utilities Well #24 & #8\ELEC DWGs\E5 Electrical Site Well 24.dwg - Layout1 Feb 25, 2016 - 4:40pm

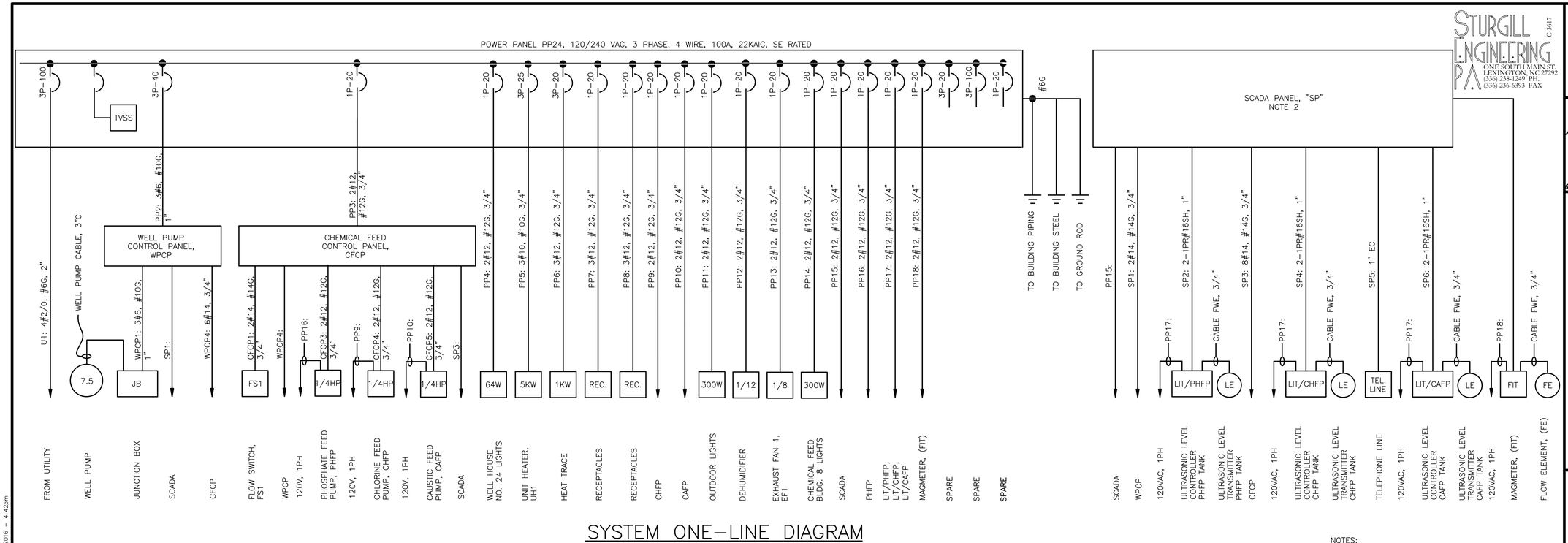

SYSTEM ONE-LINE DIAGRAM

NO SCALE

NOTES:

1. SEE SHEET E1 FOR ELECTRICAL LEGEND AND ABBREVIATIONS AND GENERAL NOTES.
2. SCADA PROVIDED BY OWNER, INSTALLED BY ELECTRICAL CONTRACTOR.

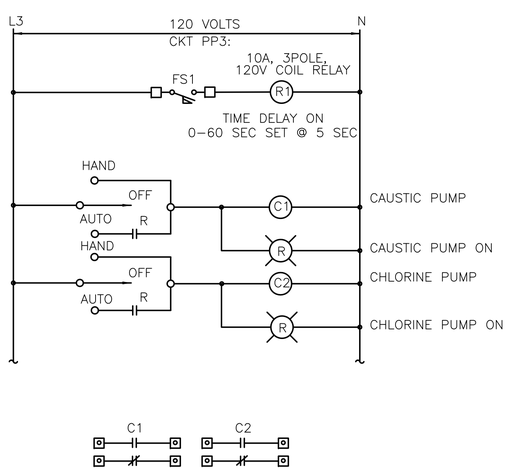

CHEMICAL FEED CONTROL PANEL, CFCP

NO SCALE (C1, C2, CONTACTS RATED FOR MOTOR SWITCHING, 1/2HP AT 120VAC.)

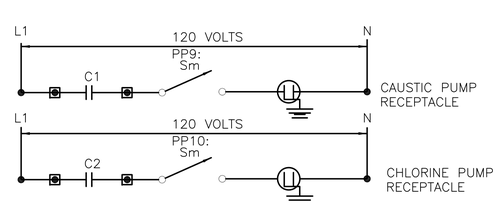

◘ TERMINAL IN CHEM PUMP PANEL

WELL CHEMICAL PUMP WIRING SCHEMATIC

NO SCALE

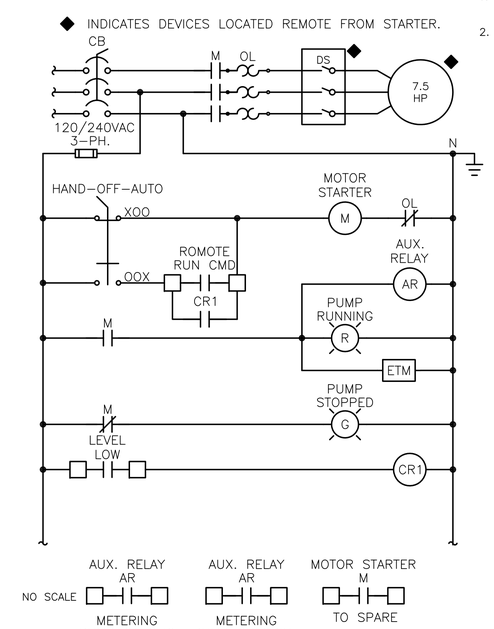

WELL PUMP CONTROL SCHEMATIC

(AR CONTACTS RATED FOR MOTOR SWITCHING, 2A AT 120VAC.)

FINAL DRAWINGS
NOT FOR CONSTRUCTION

STURGILL ENGINEERING P.A. C-3617
ONE SOUTH MAIN ST.
LEXINGTON, NC 27292
(336) 238-1240 PH.
(336) 236-6393 FAX

STURGILL ENGINEERING, P.A. C-1210 PROFESSIONAL ENGINEERING NOT TRANSFERABLE

NORTH CAROLINA SEAL 16871 ENGINEER RANDALL W. STURGILL
02/25/16

MBD CONSULTING ENGINEERS, P.A.
1300 SECOND AVENUE
SUITE 211
CONWAY, SC 29526
Phone: (843) 488-0124
Fax: (843) 488-0129

WELL 24 ELECTRICAL
ONE-LINE AND SCHEMATICS

MOORE COUNTY PUBLIC UTILITIES
PINEHURST WELL NO. 24 AND
WELL NO. 8 REHABILITATION
PINEHURST, NORTH CAROLINA

Scale:	AS SHOWN
Date:	SEPT. 2015
Drawn:	REH
Checked:	RWS
Job No.:	14020
Sheet No.:	E6
Of:	-
Version:	1

DRAWING NAME: \\SERVER\Engineering\MBD Consulting Engineers, PA\Moore Co. Public Utilities Well #24 & #8\ELEC DWGs\E6 Electrical One-line Well 24.dwg - 00 Feb 25, 2016 - 4:42pm

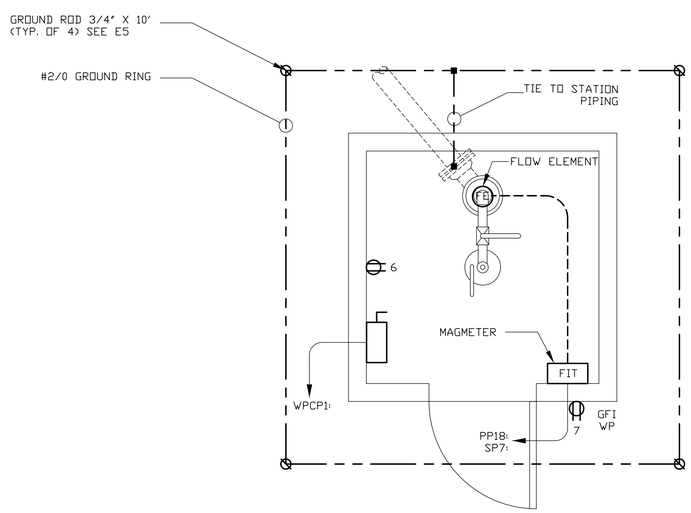

NOTES:

1. SEE SHEET E1 FOR ELECTRICAL LEGEND, ABBREVIATIONS AND GENERAL NOTES.

WELL NO. 24 POWER PLAN

SCALE: 3/4"=1'-0"

1' 6" 0 1' 2'

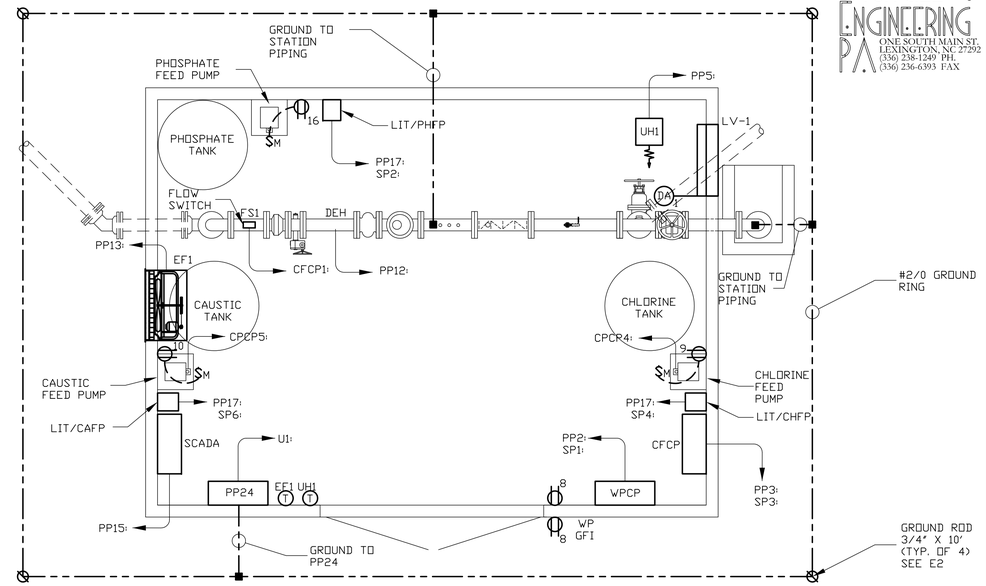

CHEMICAL FEED BLDG. 24 POWER PLAN

SCALE: 1/2"=1'-0"

2' 1' 0 2'

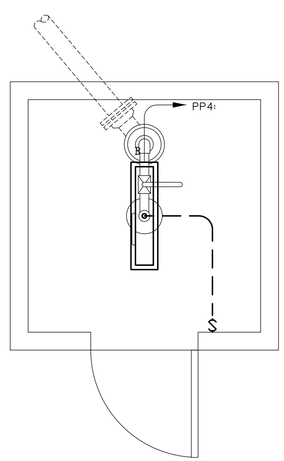

WELL NO. 24 LIGHTING PLAN

SCALE: 3/4"=1'-0"

1' 6" 0 1' 2'

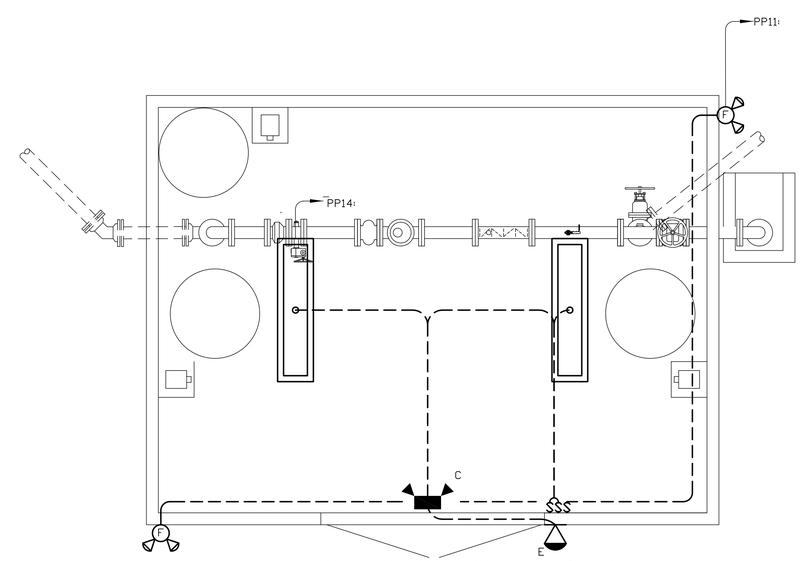

CHEMICAL FEED BLDG. 24 LIGHTING PLAN

SCALE: 1/2"=1'-0"

2' 1' 0 2'

FINAL DRAWINGS
NOT FOR CONSTRUCTION

STURGILL ENGINEERING P.A. C-3017
ONE SOUTH MAIN ST.
LEXINGTON, NC 27292
(336) 238-1249 PH.
(336) 236-6393 FAX

STURGILL ENGINEERING, P.A. PROFESSIONAL ENGINEERING C-1210 NOT TRANSFERABLE

NORTH CAROLINA SEAL 16871 ENGINEER RANDALL W. STURGILL
02/25/16

MBD CONSULTING ENGINEERS, P.A.
1300 SECOND AVENUE
SUITE 211
CONWAY, SC 29526
Phone: (843) 488-0124
Fax: (843) 488-0129

WELL 24 ELECTRICAL
LIGHTING AND POWER

MOORE COUNTY PUBLIC UTILITIES
PINEHURST WELL NO. 24 AND
WELL NO. 8 REHABILITATION
PINEHURST, NORTH CAROLINA

Scale:	AS SHOWN
Date:	SEPT. 2015
Drawn:	REH
Checked:	RWS
Job No.:	14020
Sheet No.:	E7
Of: -	Version: 1

DRAWING NAME: \\SERVER\Engineering\MBD Consulting Engineers, PA\Moore Co. Public Utilities Well #24 & #8\ELEC DWGS\E7 Electrical Lighting & Power Well 24.dwg – Layout1 (2) Feb 25, 2016 – 4:43pm

LIGHTING FIXTURE SCHEDULE

SYMBOL	LAMP / BALLAST	TOTAL POWER PER FIXTURE	MOUNTING	DESCRIPTION	MANUFACTURER'S PART NUMBER
A	ONE (1) 82 W LED / –	82 WATTS	SURFACE MOUNT ON CEILING	4' LED FIXTURE FIBERGLASS ENCLOSED WITH GASKET AND ACRYLIC PRISMATIC DIFFUSER. DAMP LABEL LISTED, 120VAC.	LITHONIA FEM4LED–9L/57–IMACD COLUMBIA LXEM4–50HL–RA–EU METALUX 4VT2–LD4–8–DR–UNV–L850–CD1–WL OR APPROVED EQUIVALENT.
B	ONE (1) 82 W LED / –	82 WATTS	SURFACE MOUNT ON CEILING	2' LED FIXTURE FIBERGLASS ENCLOSED WITH GASKET AND ACRYLIC PRISMATIC DIFFUSER. DAMP LABEL LISTED, 120VAC.	COLUMBIA LCL2–35MC–EU COLUMBIA LCR2–35ML–EU OR APPROVED EQUIVALENT.
C	TWO (2) 6W LED	12 WATTS	WALL MOUNT 8' AFF	EMERGENCY LIGHT, NEMA RATED, SEALED & GASKETED, 120VAC, w/BATTERY PACK.	LITHONIA INDX618–W–LP05VS COOPER LIGHTING UEL1–WH–SD DUAL LITE DYN6 OR APPROVED EQUIVALENT.
E	TWO (2) 3W LED	6 WATTS	WALL OR CEILING MOUNT ABOVE DOOR	EMERGENCY EGRESS LIGHT, EMERGENCY BATTERY, 2 LAMP	LITHONIA ELA–T–QWP–L0304 COOPER LIGHTING RFLED–402 DUAL LITE OCR–D–W–0603L OR EQUIVALENT.
F	TWO (2) 16W LED	32 WATTS	FLUSH MOUNT IN SOFFIT	DUAL HEAD FLOOD LIGHT FIXTURE, WET LOCATION LISTED, 120VAC.	LITHONIA OFLR–6LC–120–MO–WH COOPER LIGHTING MS–T27920L–W–ES OR APPROVED EQUIVALENT.

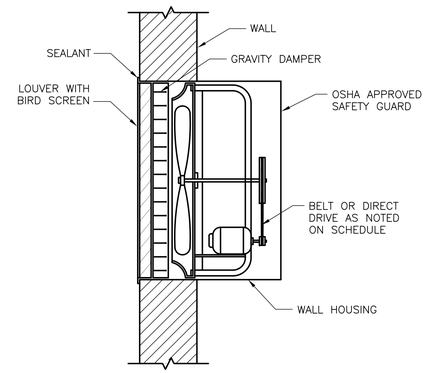

EXHAUST FAN DETAIL
NOT TO SCALE

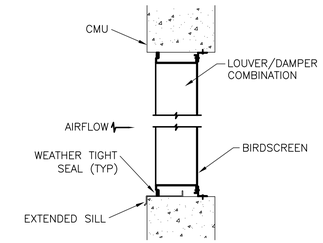

LOUVER DETAIL
NOT TO SCALE

NOTES:

1. INTAKE LOUVER SHALL BE ALUMINUM COMBINATION LOUVER DAMPER WITH DRAINABLE BLADES, INSECT SCREEN, AND DAMPER MOTOR. INTAKE LOUVER SHALL BE RUSKIN ELC6375 OR EQUAL. DAMPER MOTOR SHALL BE RATED FOR CONTINUOUS OPERATION AT 120VAC.
2. EXHAUST FAN EF–1 SHALL INCLUDE WALL HOUSING, INSECT SCREEN, GRAVITY OPERATED DAMPER, PROPELLER, MOTOR, OSHA APPROVED GUARD, MOTOR RATED DISCONNECT SWITCH, INTERNAL OVERLOAD PROTECTION,AND LINE VOLTAGE THERMOSTAT. EXHAUST FAN SHALL BE 500 CFM AT .25 IN HG, 120 VAC, 1 PHASE AS MANUFACTURED BY GREENHECK OR EQUAL. THERMOSTAT SHALL BE LINE VOLTAGE RATED, DOUBLE POLE, 1/2 HP RATED MINIMUM.
3. CONTRACTOR SHALL PROVIDE ALL LABOR, MATERIALS, TOOLS, EQUIPMENT, PERMITS, AND OPERATIONS NECESSARY FOR THE PROPER EXECUTION AND COMPLETION OF ALL ELECTRICAL WORK INDICATED ON THE DRAWINGS.
4. ALL ELECTRICAL WORK AND MATERIALS SHALL COMPLY WITH THE NEC AND OTHER APPLICABLE FEDERAL, STATE, AND LOCAL CODES. ALL ELECTRICAL EQUIPMENT SHALL BE UL LISTED OR LABELED.
5. ALL DISCONNECT SWITCHES, JUNCTION BOXES, MOTOR CONTROLLERS, AND OTHER EQUIPMENT REQUIRING ELECTRICAL POWER CONNECTION SHALL BE MARKED WITH VOLTAGE PRESENT, AS APPROPRIATE TO DESIGNATE 120, 208, 240, 277, 480, 12,470 VOLTS AND SINGLE OR THREE PHASE, AS APPLICABLE.
6. WIRE SHALL BE STRANDED COPPER WITH TYPE THHN/THWN 600V INSULATION. CONDUCTORS SHALL BE COLOR CODED BLACK, RED, WHITE, AND GREEN ON 120/240 VOLT SYSTEMS AND BROWN, ORANGE, YELLOW, GRAY, AND GREEN ON 480Y/277 VOLT SYSTEMS. A GROUNDING CONDUCTOR SHALL BE INSTALLED IN EVERY CONDUIT.
7. CONTRACTOR SHALL BE RESPONSIBLE FOR ROUTING ALL CONDUITS. ALL CONDUIT SHALL BE CONCEALED WHERE POSSIBLE.
8. CONTRACTOR SHALL VERIFY ALL EQUIPMENT LOCATIONS AND CONNECTION POINTS PRIOR TO INSTALLATION.
9. FUSED DISCONNECT SWITCHES SHALL BE HEAVY DUTY RATED 600 VOLT, 3 PHASE, WITH NEMA 1 ENCLOSURE AND TIME–DELAY FUSES.
10. TRANSIENT VOLTAGE SURGE SUPPRESSION (TVSS) SHALL BE SUITABLE FOR USE ON A 480Y/277V GROUNDED WYE SYSTEM, AND SHALL HAVE AN IMPULSE SPARKOVER VOLTAGE OF 1500 V ON A VOLTAGE SURGE OF EITHER POLARITY HAVING A RATE–OF–RISE OF 10,000 VOLTS PER MICROSECOND. MINIMUM LIFE SHALL BE 2000 CURRENT SURGES OF 5,000 AMPERES ON A 10 X 20 MICROSECOND WAVESHAPE, AND THE SUBSEQUENT POWER–FOLLOW CURRENT, PER PHASE. TVSS SHALL BE MOUNTED DIRECTLY BELOW OR BESIDE THE MANUAL TRANSFER SWITCH AND CONNECTED TO THE LOAD SIDE TERMINALS OF THE MTS.
11. UNLESS OTHERWISE NOTED, MOUNT LIGHT SWITCHES AND CONVENIENCE RECEPTACLES 45" ABOVE FINISHED FLOOR. ALL CONVENIENCE RECEPTACLES SHALL HAVE GROUND FAULT PROTECTION.
12. THE WELL PUMP MOTOR STARTER SHALL BE A NEMA SIZE 1 COMBINATION CIRCUIT BREAKER MOTOR STARTER. THE MOTOR STARTER SHALL INCLUDE AN OVERSIZED NEMA 12 ENCLOSURE, CIRCUIT BREAKER WITH ADJUSTABLE INSTANTANEOUS TRIP, FULL VOLTAGE, NON–REVERSING NEMA RATED CONTACTOR WITH TWO EXTRA SETS OF AUXILIARY CONTACTS, OVERLOAD RELAY WITH AMBIENT TEMPERATURE COMPENSATION, CONTROL POWER TRANSFORMER WITH OVERCURRENT PROTECTION, AUXILIARY RELAY, NON–RESETTABLE SIX–DIGIT ELAPSED TIME METER, 30MM OPERATOR CONTROLS, AND INDICATORS AS INDICATED ON THE DRAWING. THE AUXILIARY RELAY SHALL HAVE CONTACTS RATED 1/2HP AT 120VAC FOR CONTROL OF THE CHEMICAL FEED PUMPS.
13. PRESSURE SWITCH SHALL BE B/W CONTROLS 09–132000 OR EQUAL.
14. WELL PUMP DISCONNECT SWITCH SHALL BE 3 POLE, 30 AMPERES, HEAVY DUTY, NEMA 4X SS, POST MOUNTED NEAR WELL.

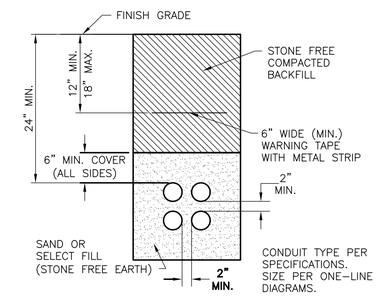

TYPICAL DIRECT BURIED CONDUIT SECTION
NOT TO SCALE

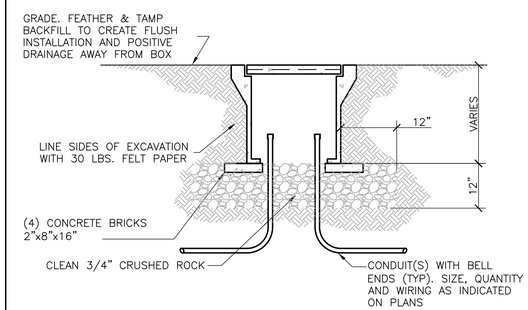

UNDERGROUND CONCRETE PULL BOX
NOT TO SCALE

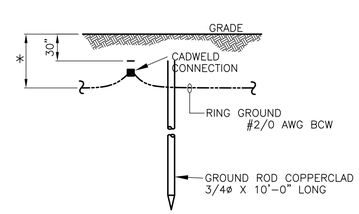

* 2'–6" OR 6" BELOW FROST LINE, WHICHEVER IS DEEPER

GROUND ROD DETAIL
NOT TO SCALE

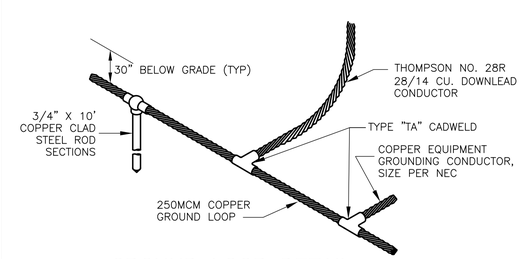

GROUND LOOP DETAIL
NOT TO SCALE

FINAL DRAWINGS
NOT FOR CONSTRUCTION

STURGILL ENGINEERING P.A. C-3617
ONE SOUTH MAIN ST.
LEXINGTON, NC 27292
(336) 238-1240 PH.
(336) 236-6393 FAX

STURGILL ENGINEERING, P.A. C-1210 PROFESSIONAL ENGINEERING NO. 1 ESTABLISHED 1946

CARLA CARR SEALA 22681 PROFESSIONAL ENGINEER NORTH CAROLINA
04/25/16

MBD CONSULTING ENGINEERS, P.A.
1300 SECOND AVENUE
SUITE 211
CONWAY, SC 29526
Phone: (843) 488-0124
Fax: (843) 488-0129

ELECTRICAL DETAILS

MOORE COUNTY PUBLIC UTILITIES
PINEHURST WELL NO. 24 AND
WELL NO. 8 REHABILITATION
PINEHURST, NORTH CAROLINA

Scale:	AS SHOWN
Date:	SEPT. 2015
Drawn:	REH
Checked:	RWS
Job No.:	14020
Sheet No.:	E8
Of:	-
Version:	1

DRAWING NAME: \\SERVER\Engineering\MBD Consulting Engineers, PA\Moore Co. Public Utilities Well #24 & #8\ELEC DWGs\EB Misc. Details.dwg – .00 Feb 25, 2016 – 4:44pm