ONE-LINE DIAGRAM LEGEND

1500KVA
2.4KV : 480Y/277
3-P, 60HZ

TRANSFORMER WITH KVA RATING, PRIMARY AND SECONDARY VOLTAGES, NUMBER OF PHASES, AND FREQUENCY.

20 — 22: 3#8,#10G,2"

CIRCUIT NO.22 WITH #8 INSULATED CONDUCTORS, 1#10 BARE GROUND WIRE ALL IN 2" CONDUIT TO 20 HP MOTOR.

15 — AUXILIARY ITEMS MAY NOT BE SHOWN COMPLETELY

ONE-LINE SHOWING POWER AND CONTROL TO A PACKAGE UNIT. AS FOR EXAMPLE A STEAM GENERATOR OR AN AIR HANDLING UNIT, SHALL IMPLY THAT ANY AND ALL ASSOCIATED EQUIP-MENT SHALL ALSO BE INSTALLED AND WIRED AS REQUIRED BY THE EQUIPMENT FURNISHED.

INDICATES THAT ALL OR PART OF CIRCUIT MAY BE ROUTED IN DUCT BANK OR UNDERGROUND. CONDUIT SIZE SHOWN ON ONE-LINE IS ABOVE GROUND AND/OR INSIDE OF STRUCTURE. SEE DUCT BANK SCHEDULE AND SECTIONS FOR CONDUIT SIZE OF UNDERGROUND PORTION OF CIRCUIT.

SSRV — SOLID STATE REDUCED VOLTAGE MOTOR STARTER

HIGH VOLTAGE DRAWOUT AIR OR VACUUM CIRCUIT BREAKER

3P-20 — LOW VOLTAGE AIR CIRCUIT BREAKER, 3 POLE, 20 AMPERE

S4 — SIZE 4 COMBINATION MAGNETIC MOTOR STARTER

LOW VOLTAGE DRAWOUT AIR CIRCUIT BREAKER

HIGH VOLTAGE DRAWOUT CONTACTOR

FUSE AND DISCONNECT SWITCH

S2 — SIZE 2 COMBINATION MAGNETIC MOTOR STARTER, REVERSING OR 2 SPEED

AFD — ADJUSTABLE FREQUENCY DRIVE WITH OUTPUT CONTACTOR

POTENTIAL TRANSFORMER

CURRENT TRANSFORMER

CONDUIT & WIRING INSTALLATION LEGEND

CONDUIT TURNING UP. CONDUIT TURNING DOWN.

CONDUIT PLUGGED FLUSH. CONDUIT CAPPED.

SHORT DASH FOR EACH PHASE CONDUCTOR. LONG DASH FOR NEUTRAL CONDUCTOR. CIRCULAR DASH FOR GROUND WIRE.

L2-5 — TYPICAL FOR HOME RUN TO BE ROUTED TO LIGHTING PANEL L2 & CONNECTED TO CIRCUIT #5

A — LIGHTING FIXTURE. REFER TO NUMBER OR LETTER IN FIXTURE SCHEDULE

6 — DIRECTION INDICATED FOR DIRECTIONAL FIXTURE

FLUORESCENT FIXTURE. REFER TO NUMBER OR LETTER IN FIXTURE SCHEDULE.

E — E — CONCRETE ENCASED ELECTRICAL CONDUIT

EE — EE — DIRECT BURIED ELECTRICAL CONDUIT

CONCEALED CONDUIT

GROUND CONDUCTOR

3-1PR#16SH	THREE, SINGLE PAIR, TWISTED, SHIELDED #16 AWG CABLE
3#16STP	THREE, SINGLE PAIR, TWISTED, SHIELDED #16 AWG CABLE
3-7/C#14	THREE, SINGLE, SEVEN CONDUCTOR #14 AWG MULTICONDUCTOR CONTROL CABLES
2-RS485	TWO CABLES FOR RS485 COMMUNICATION

ABBREVIATIONS

A	AMBER, AMPERE, ALARM
AC	ALTERNATING CURRENT
ACB	AIR CIRCUIT BREAKER
AFD	ADJUSTABLE FREQUENCY DRIVE
AM	AMMETER
ANN	ANNUNCIATOR
AR	ALARM RELAY
AS	AMMETER SWITCH
AWG	AMERICAN WIRE GAGE
BC	BATTERY CHARGER
BR	BRAKE
BT	BEARING TEMPERATURE
C	CLOSE, COUNTER OR CONTACTOR
CAP	CAPACITOR
CB	CIRCUIT BREAKER
CB"A"	CIRCUIT BREAKER AUXILIARY CONTACT (OPEN WHEN BREAKER IS OPEN AND CLOSED WHEN BREAKER IS CLOSED OR TRIPPED)
CB"B"	CIRCUIT BREAKER AUXILIARY CONTACT (CLOSED WHEN BREAKER IS OPEN AND OPEN WHEN BREAKER IS CLOSED OR TRIPPED)
CF	CHLORINE FEEDER
CFCP	CHLORINE FEED CONTROL PANEL
CI	CELL INTERLOCK
CKT	CIRCUIT
CL2	CHLORINE
COS	CABLE OPERATED SWITCH
CP	CONTROL PANEL
CPT	CONTROL POWER TRANSFORMER
CR	CURRENT OR CONTROL RELAY
CS	CONTROL STATION
CT	CYCLE TIMER OR CURRENT TRANSFORMER
CTC	CYCLE TIMER CLUTCH
CTM	CYCLE TIMER MOTOR
2/C	2 CONDUCTOR
4"C	4" CONDUIT
DC	DIRECT CURRENT
DBR	DEAD BUS RELAY
DM	DAMPER MOTOR OR DEMAND METER
DPDT	DOUBLE POLE DOUBLE THROW
DPST	DOUBLE POLE SINGLE THROW
DPR	DIFFERENTIAL PRESSURE REGULATOR
DPS	DIFFERENTIAL PRESSURE SWITCH
DS	DISCONNECT SWITCH
DSLC	DIGITAL SEQUENCING LOAD CONTROLLER
DVR	DIGITAL VOLTAGE REGULATOR
EC	EMPTY CONDUIT
EF	EXHAUST FAN
EHH	ELECTRICAL HAND HOLE
EL	ELEVATION OR EMERGENCY LIGHT
EMH	ELECTRICAL MANHOLE
ES	END SWITCH OR EMERGENCY STOP
ETI	ELAPSED TIME INDICATOR
ETM	ELAPSED TIME METER
F	FORWARD
FCS	FREQUENCY CONTROL SWITCH
FIT	FLOW INDIATING TRANSMITTER
FQ	FLOW TOTALIZER
FQI	FLOW TOTALIZING INDICATOR
G	GREEN OR GROUND
GD	GROUND DETECTOR
GEN	GENERATOR
GFI	GROUND FAULT INTERRUPTER
GLS	GEARED LIMIT SWITCH
#8G	#8 GROUND WIRE
H	HIGH OR HUMIDISTAT
HC	HOT CIRCUIT
HH	HANDHOLE
HMT	HIGH MOTOR TEMPERATURE
HOA	HAND-OFF-AUTO
HOR	HAND-OFF-REMOTE
HP	HORSEPOWER
HWCO	HIGH WATER CUTOFF
HZ	HERTZ (CYCLE)
I/O	INPUT/OUTPUT
IPCP	INFLUENT PUMP CONTROL PANEL
J	JUNCTION BOX
JB	JUNCTION BOX
K	KEY INTERLOCK
KV	KILOVOLT
KVA	KILOVOLT AMPERE
KVAR	KILOVAR
KW	KILOWATT
KWH	KILOWATT HOUR
L	LOW, LEVEL
LA	LIGHTNING ARRESTER
LC	LIGHTING CONTACTOR
LE	LEVEL ELEMENT
LIT	LEVEL INDICATING TRANSMITTER
LOR	LOCAL-OFF-REMOTE
LS	LIMIT OR LEVEL SWITCH
LSI	LONG, SHORT, & INSTANTANEOUS TRIP UNIT
LSIG	LONG, SHORT, INST., & GROUND FAULT TRIP UNIT
LWCO	LOW WATER CUTOFF
M	MAGNETIC MOTOR STARTER
MA	MILLIAMPERE
MCC	MOTOR CONTROL CENTER
MCLU	MOTOR CONTROL LINEUP
MCM	THOUSAND CIRCULAR MIL
MD	MOISTURE DETECTOR
MFM	MAGNETIC FLOW METER
MFR	MANUFACTURER
MH	MANHOLE OR MOUNTING HEIGHT
MOV	MOTOR OPERATED VALVE
MS	MANUAL MOTOR STARTER
MSH	MOTOR SPACE HEATER
MV	MILLIVOLT
MVA	MEGA VOLT AMPERE
N	NEUTRAL
NC	NORMALLY CLOSED
NO	NORMALLY OPEN, NUMBER
O	OPEN
OIT	OPERATOR INTERFACE TERMINAL
OL	OVERLOAD
P	PRIMARY
PB	PUSH BUTTON OR PULL BOX
PC	PROGRAMMABLE CONTROLLER
PDP	POWER DISTRIBUTION PANEL
PF	PROPELLER FAN
PFM	POWER FACTOR METER
PH	PHASE, CHEMICAL TERM
PLC	PROGRAMMABLE LOGIC CONTROLLER
PMG	PERMANENT MAGNET GENERATOR
PS	PRESSURE SWITCH
PT	POTENTIAL TRANSFORMER, PROGRAM TIMER
2P	2 POLE
R	RED, RAISE, RELAY OR REVERSE
RECP	RECEPTACLE
RES	RESISTOR
RT	REPEATING TIMER
RTD	RESISTANCE TYPE TEMP DETECTOR
RTU	REMOTE TERMINAL UNIT
RVAT	REDUCED VOLTAGE AUTO-TRANSFORMER TYPE
S2	SIZE 2 STARTER
SB/I	SIGNAL BOOSTER/ISOLATOR
SCP	SYSTEM CONTROL PANEL
SH	SPACE HEATER
SN	SOLID NEUTRAL
SMS	RUN-PERM-CHECK-OFF SELECTOR SWITCH
SP	SURGE PROTECTOR
SPDT	SINGLE POLE DOUBLE THROW
SPST	SINGLE POLE SINGLE THROW
SS	SELECTOR SWITCH
SSRV	SOLID STATE REDUCED VOLTAGE
SSM	SOLID STATE METER
STP	SHIELDED TWISTED PAIR
SUPV	SUPERVISORY CONTROL
SV	SOLENOID VALVE
SWBD	SWITCHBOARD
SWGR	SWITCHGEAR
T	THERMOSTAT, TIMER, OR TOTALIZER
TACH	TACHOMETER
TB	TERMINAL BLOCK
TC	TIMER CLUTCH
TD	TIME DELAY RELAY
TEMP	TEMPERATURE
TM	TIMER MOTOR
TQ	TORQUE
TS	TORQUE OR TEMPERATURE SWITCH
TTB	TELEPHONE TERMINAL BOX
UG	UNDERGROUND
UV	UNDER VOLTAGE
UPS	UNINTERRUPTIBLE POWER SUPPLY
V	VOLTS
VA	VOLT AMPERE
VAR	VARMETER
VCS	VOLTAGE CONTROL SWITCH
VFR	VOLTAGE/FREQUENCY RELAY
VM	VOLTMETER
VS	VOLTMETER SWITCH
W	WHITE OR WATTS
WH	WATTHOUR METER
WM	WATT METER
WP	WEATHERPROOF
X	AUXILIARY RELAY
XFMR	TRANSFORMER
XP	EXPLOSION PROOF
Y	YELLOW
Z	AUXILIARY RELAY
ZS	POSITION SWITCH

SCHEMATIC SYMBOLS

WIRE INTERSECTION POINT

EXTERNAL CONNECTION POINT

NORMALLY OPEN CONTACT

NORMALLY CLOSED CONTACT

STARTER, CONTACTOR OR RELAY COIL

NORMALLY OPEN PUSH BUTTON

NORMALLY CLOSED PUSH BUTTON

MAINTAINED PUSH BUTTON

NORMALLY CLOSED GEARED LIMIT SWITCH

NORMALLY OPEN GEARED LIMIT SWITCH

FLOAT SWITCH (CLOSING ON RISING LEVEL)

FLOAT SWITCH (OPENING ON RISING LEVEL)

P — PRESSURE SWITCH (CLOSING ON RISING PRESSURE)

P — PRESSURE SWITCH (OPENING ON RISING PRESSURE)

V — VACUUM SWITCH (CLOSING ON INCREASING VACUUM)

V — VACUUM SWITCH (OPENING ON INCREASING VACUUM)

TEMPERATURE SWITCH (CLOSING ON RISING TEMPERATURE)

TEMPERATURE SWITCH (OPENING ON RISING TEMPERATURE)

FLOW ACTUATED SWITCH (CLOSING ON INCREASE IN FLOW)

FLOW ACTUATED SWITCH (OPENING ON INCREASE IN FLOW)

ON TIME DELAY SWITCH (NORMALLY OPEN WITH TIME DELAY CLOSING AFTER COIL IS ENERGIZED)

OFF TIME DELAY SWITCH (NORMALLY OPEN WITH TIME DELAY OPENING AFTER COIL IS DE-ENERGIZED)

ON TIME DELAY SWITCH (NORMALLY CLOSED WITH TIME DELAY OPENING AFTER COIL IS ENERGIZED)

OFF TIME DELAY SWITCH (NORMALLY CLOSED WITH TIME DELAY CLOSING AFTER COIL IS DE-ENERGIZED)

TORQUE SWITCH (NORMALLY OPEN)

TORQUE SWITCH (NORMALLY CLOSED)

LIMIT SWITCH (NORMALLY OPEN)

LIMIT SWITCH (NORMALLY OPEN, HELD CLOSED)

INDICATING LIGHT

FUSE

POTENTIOMETER

CAPACITOR

DIODE

RESISTOR

CONTROL POWER TRANSFORMER

SWITCH

MS — MANUAL STARTER

OL — OVERLOAD

ELECTRODE

LIMIT SWITCH (NORMALLY CLOSED)

LIMIT SWITCH (NORMALLY CLOSED, HELD OPEN)

DIFFERENTIAL PRESSURE SWITCH (NORMALLY OPEN, CLOSING ON INCREASING DIFF.)

DIFFERENTIAL PRESSURE SWITCH (NORMALLY CLOSED, OPENING ON INCREASING DIFF.)

SWITCH & OUTLET SYMBOLS

S	SINGLE POLE SWITCH	1	DUPLEX RECEPTACLE 120 VOLT, TYPICAL CIRCUIT NUMBER NOTED
S2	TWO POLE SWITCH		CLOCK RECEPTACLE
S3	THREE-WAY SWITCH		RANGE RECEPTACLE
S4	FOUR-WAY SWITCH		TWISTLOCK RECEPTACLE
SM	MOMENTARY SWITCH	30	240V, 1-PH RECEPTACLE, TYPICAL AMPERE RATING NOTED
SWP	WEATHERPROOF SWITCH	60	480V, 3-PH WELDING RECEPTACLE, TYPICAL AMPERE RATING NOTED
SP	SWITCH WITH PILOT LIGHT		COMBINATION 120V, 240 VOLT SPECIAL RECEPTACLE FOR LABORATORY EQUIPMENT
SK	KEY OPERATED SWITCH		DUPLEX FLOOR OUTLET
SH	HAZARDOUS AREA SWITCH		TELEPHONE OUTLET
SD	DIMMER SWITCH		TELEPHONE FLOOR OUTLET
		CX	COAXIAL CABLE OUTLET

MISCELLANEOUS SYMBOLS

BELL	DISCONNECT SWITCH
HORN	COMBINATION STARTER
BUZZER	POWER PANEL
UNIT HEATER	LIGHTING PANEL
THERMOSTAT	MISCELLANEOUS PANEL
JUNCTION BOX	LIGHTING CONTACTOR
GROUND ROD	
GROUND CONNECTION	

GENERAL NOTES

1. SOLID LINES (———) INDICATE NEW WORK OR EQUIPMENT.
2. SCREENED LINES (————) INDICATE EXISTING WORK OR EQUIPMENT.
3. DASHED LINES (— —) INDICATE FUTURE WORK OR EQUIPMENT.
4. THIS IS A GENERAL LEGEND SHEET. SOME SYMBOLS AND ABBREVIATIONS MAY NOT BE UTILIZED ON THIS SPECIFIC PROJECT.
5. UNDERGROUND DUCT BANKS PASSING UNDER ROADS SHALL BE CONCRETE ENCASED A MINIMUM OF 5' PAST EACH EDGE OF THE ROAD.
6. CONTRACTOR SHALL FIELD ROUTE UNDERGROUND DUCT BANK TO AVOID EXISTING EQUIPMENT.
7. CONTRACTOR SHALL BE RESPONSIBLE FOR ROUTING ANY NEW CONDUITS. THIS INCLUDES CONDUITS ON ONE-LINES AND HOMERUNS ON PLANS. CABLE AND CONDUIT MAY NOT ALWAYS BE SHOWN ON PLAN SHEETS.
8. SEE SPECIFICATIONS FOR SEQUENCE OF CONSTRUCTION AND OUTAGE RESTRICTIONS.
9. SEE SPECIFICATIONS FOR BREAKDOWN OF ITEMS IN THE BASE BID AND ALTERNATES.
10. HATCHED AREAS (▨) ON ONE-LINES AND ELEVATIONS INDICATE EQUIPMENT TO BE REMOVED BY THE CONTRACTOR.

FINAL DRAWINGS
NOT FOR CONSTRUCTION

STURGILL ENGINEERING P.A. C-3017
ONE SOUTH MAIN ST.
LEXINGTON, NC 27292
(336) 238-1240 PH.
(336) 236-6393 FAX

STURGILL ENGINEERING, P.A. C-1210 PROFESSIONAL ENGINEERING NOT TRANSFERABLE

NORTH CAROLINA SEAL 16871 ENGINEER RANDALL W. STURGILL
02/25/16

MBD CONSULTING ENGINEERS, P.A.
1300 SECOND AVENUE
SUITE 211
CONWAY, SC 29526
Phone: (843) 488-0124
Fax: (843) 488-0129

ELECTRICAL LEGEND, ABBREVIATIONS AND NOTES

MOORE COUNTY PUBLIC UTILITIES
PINEHURST WELL NO. 24 AND
WELL NO. 8 REHABILITATION
PINEHURST, NORTH CAROLINA

Scale:	AS SHOWN
Date:	SEPT. 2015
Drawn:	REH
Checked:	RWS
Job No.:	14020
Sheet No.:	E1
Of:	-
Version:	1

DRAWING NAME: \\SERVER\Engineering\MBD Consulting Engineers, PA\Moore Co. Public Utilities Well #24 & #8\ELEC DWGs\E1 LEGEND.dwg - .00 Feb 25, 2016 - 4:29pm

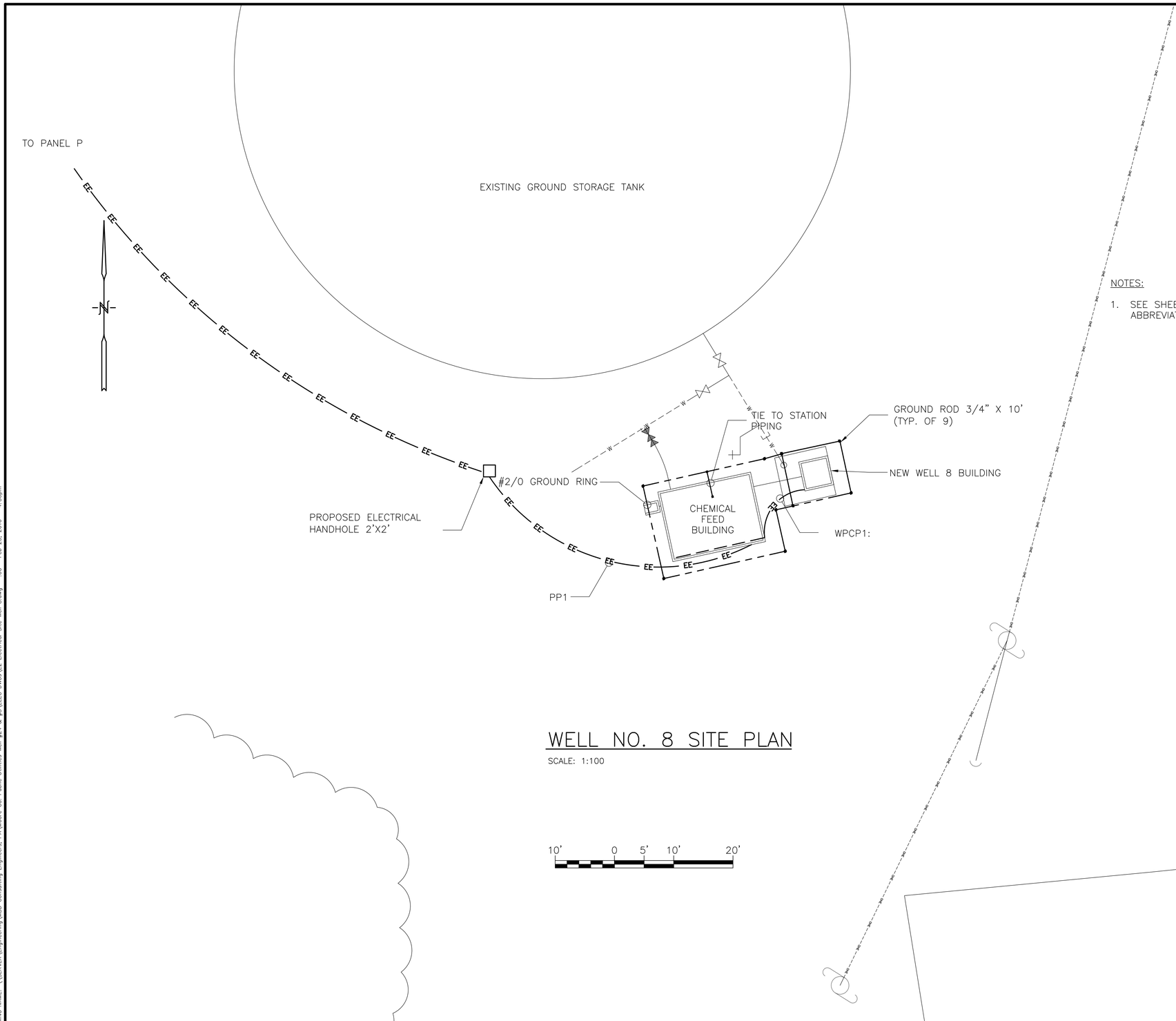

WELL NO. 8 SITE PLAN

SCALE: 1:100

NOTES:

1. SEE SHEET E1 FOR ELECTRICAL LEGEND, ABBREVIATIONS AND GENERAL NOTES.

FINAL DRAWINGS
NOT FOR CONSTRUCTION

STURGILL ENGINEERING P.A. C-3617
ONE SOUTH MAIN ST.
LEXINGTON, NC 27292
(336) 238-1240 PH.
(336) 236-6393 FAX

STURGILL ENGINEERING, P.A. C-1210 PROFESSIONAL ENGINEERING NOT TRANSFERABLE

NORTH CAROLINA SEAL 16871 ENGINEER RANDALL W. STURGILL

02/25/16

MBD CONSULTING ENGINEERS, P.A.
1300 SECOND AVENUE
SUITE 211
CONWAY, SC 29526
Phone: (843) 488-0124
Fax: (843) 488-0129

WELL 8 ELECTRICAL SITE PLAN

MOORE COUNTY PUBLIC UTILITIES
PINEHURST WELL NO. 24 AND
WELL NO. 8 REHABILITATION
PINEHURST, NORTH CAROLINA

Scale:	AS SHOWN
Date:	SEPT. 2015
Drawn:	REH
Checked:	RWS
Job No.:	14020
Sheet No.:	E2
Of: -	Version: 1

DRAWING NAME: \\SERVER\Engineering\MBD Consulting Engineers, PA\Moore Co. Public Utilities Well #24 & #8\ELEC DWGs\E2 Electrical Site Well 8.dwg – .00 Feb 25, 2016 – 4:30pm

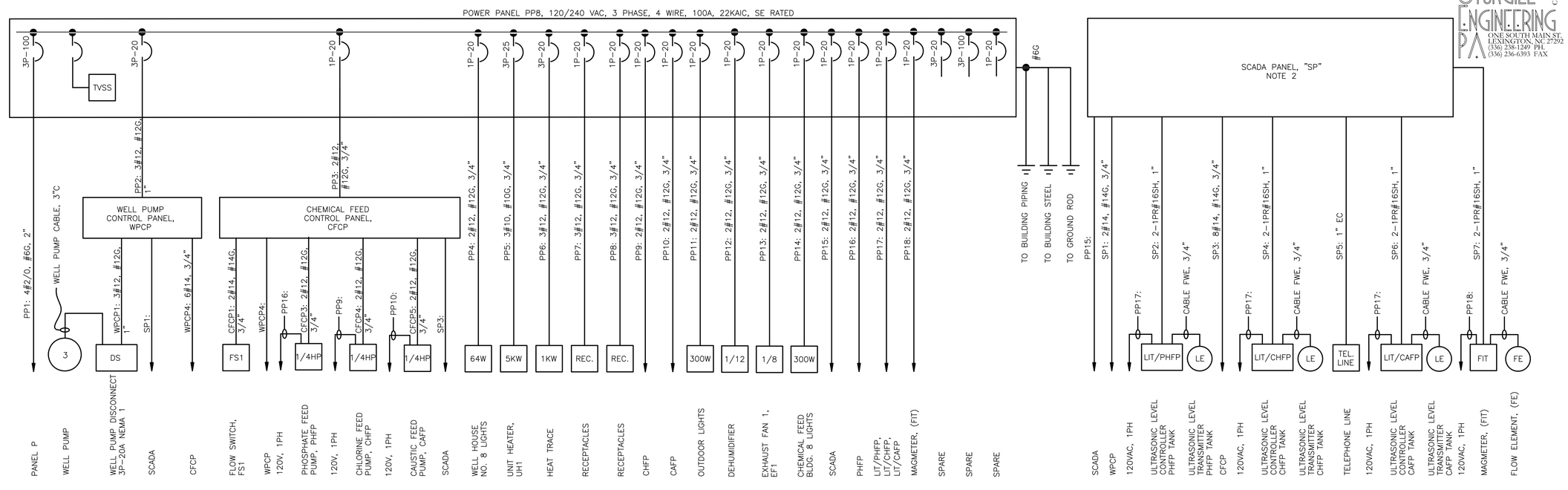

SYSTEM ONE-LINE DIAGRAM

NO SCALE

NOTES:

1. SEE SHEET E1 FOR ELECTRICAL LEGEND AND ABBREVIATIONS AND GENERAL NOTES.
2. SCADA PROVIDED BY OWNER, AND INSTALLED BY ELECTRICAL CONTRACTOR.

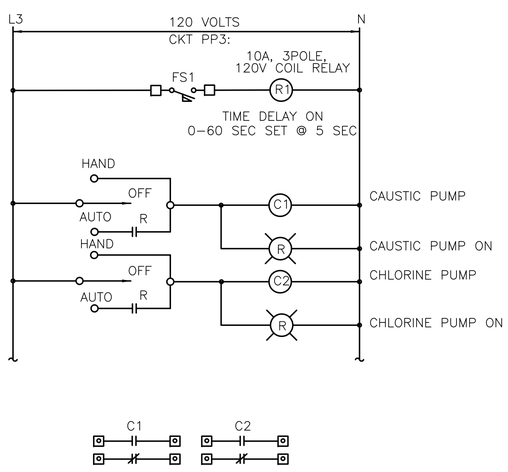

CHEMICAL FEED CONTROL PANEL, CFCP

NO SCALE (C1, C2, CONTACTS RATED FOR MOTOR SWITCHING, 1/2HP AT 120VAC.)

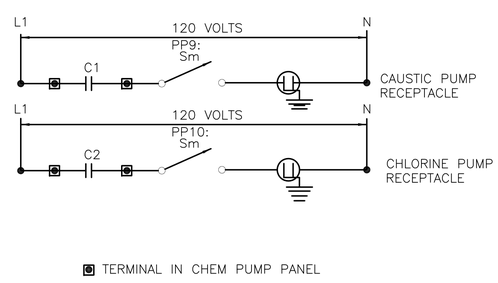

WELL CHEMICAL PUMP WIRING SCHEMATIC

NO SCALE

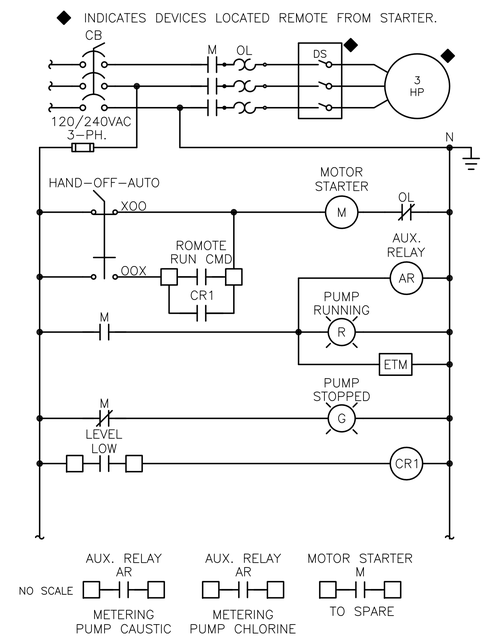

NO SCALE

WELL PUMP CONTROL SCHEMATIC

(AR CONTACTS RATED FOR MOTOR SWITCHING, 2A AT 120VAC.)

FINAL DRAWINGS
NOT FOR CONSTRUCTION

STURGILL ENGINEERING P.A.
C-3617
ONE SOUTH MAIN ST.
LEXINGTON, NC 27292
(336) 238-1240 PH.
(336) 236-6393 FAX

STURGILL ENGINEERING, P.A.
PROFESSIONAL ENGINEERING
C-1210
NOT TRANSFERABLE

NORTH CAROLINA
SEAL
16871
ENGINEER
RANDALL W. STURGILL
02/25/16

MBD CONSULTING ENGINEERS, P.A.
1300 SECOND AVENUE
SUITE 211
CONWAY, SC 29526
Phone: (843) 488-0124
Fax: (843) 488-0129

WELL 8 ELECTRICAL
ONE-LINE AND SCHEMATICS

MOORE COUNTY PUBLIC UTILITIES
PINEHURST WELL NO. 24 AND
WELL NO. 8 REHABILITATION
PINEHURST, NORTH CAROLINA

Scale:	AS SHOWN
Date:	SEPT. 2015
Drawn:	REH
Checked:	RWS
Job No.:	14020
Sheet No.:	E3
Of:	-
Version:	1

DRAWING NAME: \\SERVER\Engineering\MBD Consulting Engineers, PA\Moore Co. Public Utilities Well #24 & #8\ELEC DWGs\E3 Electrical One-line Well 8.dwg – .00 Feb 25, 2016 – 4:35pm

NOTES:

1. SEE SHEET E1 FOR ELECTRICAL LEGEND, ABBREVIATIONS AND GENERAL NOTES.

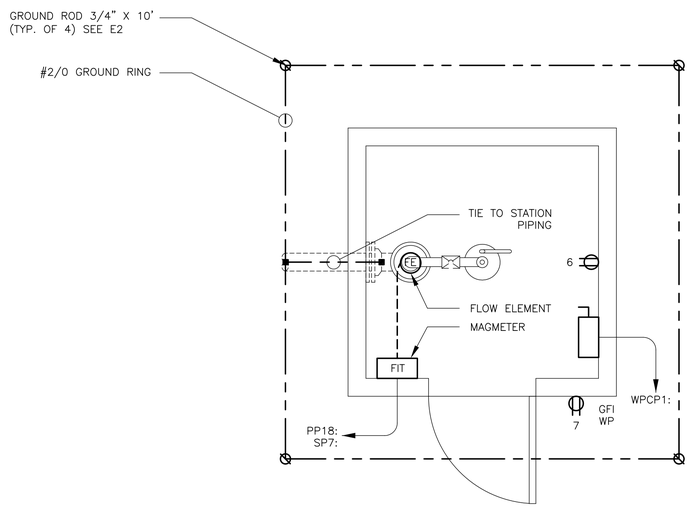

WELL NO. 8 POWER PLAN

SCALE: 3/4"=1'-0"

1' 6" 0 1' 2'

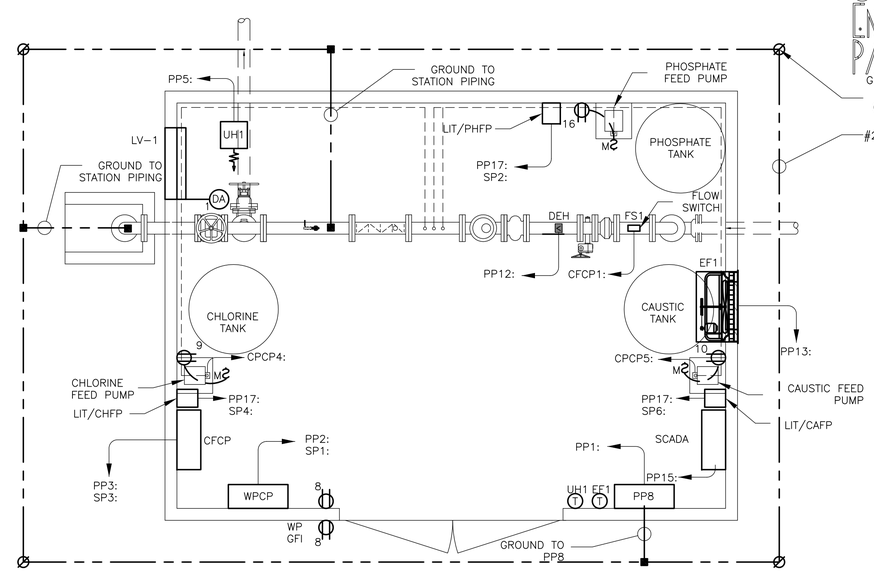

CHEMICAL FEED BLDG. 8 POWER PLAN

SCALE: 1/2"=1'-0"

2' 1' 0 2'

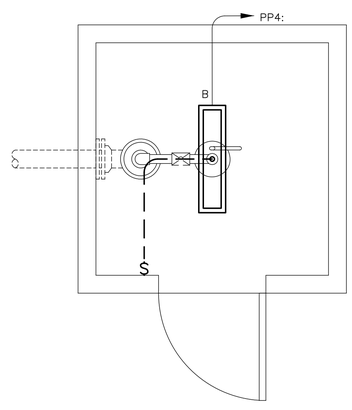

WELL NO. 8 LIGHTING PLAN

SCALE: 3/4"=1'-0"

1' 6" 0 1' 2'

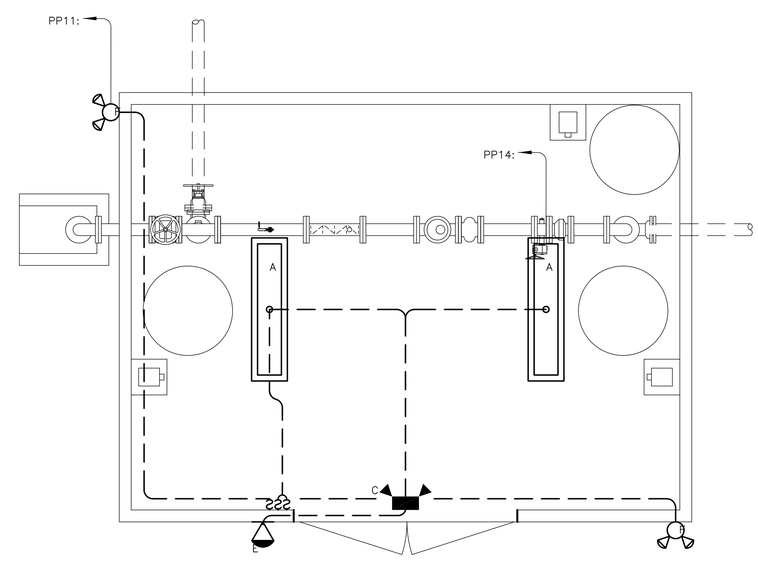

CHEMICAL FEED BLDG. 8 LIGHTING PLAN

SCALE: 1/2"=1'-0"

2' 1' 0 2'

FINAL DRAWINGS
NOT FOR CONSTRUCTION

STURGILL ENGINEERING PA
C-3617
ONE SOUTH MAIN ST.
LEXINGTON, NC 27292
(336) 238-1249 PH.
(336) 236-6393 FAX

STURGILL ENGINEERING, PA
PROFESSIONAL ENGINEERING CORPORATION
C-1210

NORTH CAROLINA
SEAL 16871
ENGINEER
RANDALL W. STURGILL
02/25/16

MBD CONSULTING ENGINEERS, P.A.
1300 SECOND AVENUE
SUITE 211
CONWAY, SC 29526
Phone: (843) 488-0124
Fax: (843) 488-0129

WELL 8 ELECTRICAL LIGHTING AND POWER

MOORE COUNTY PUBLIC UTILITIES
PINEHURST WELL NO. 24 AND
WELL NO. 8 REHABILITATION
PINEHURST, NORTH CAROLINA

Scale:	AS SHOWN
Date:	SEPT. 2015
Drawn:	REH
Checked:	RWS
Job No.:	14020
Sheet No.:	E4
Of:	-
Version:	1

DRAWING NAME: \\SERVER\Engineering\MBD Consulting Engineers, PA\Moore Co. Public Utilities Well #24 & #8\ELEC DWGs\E4 Electrical Lighting & Power Well 8.dwg - .00 Feb 25, 2016 - 4:39pm

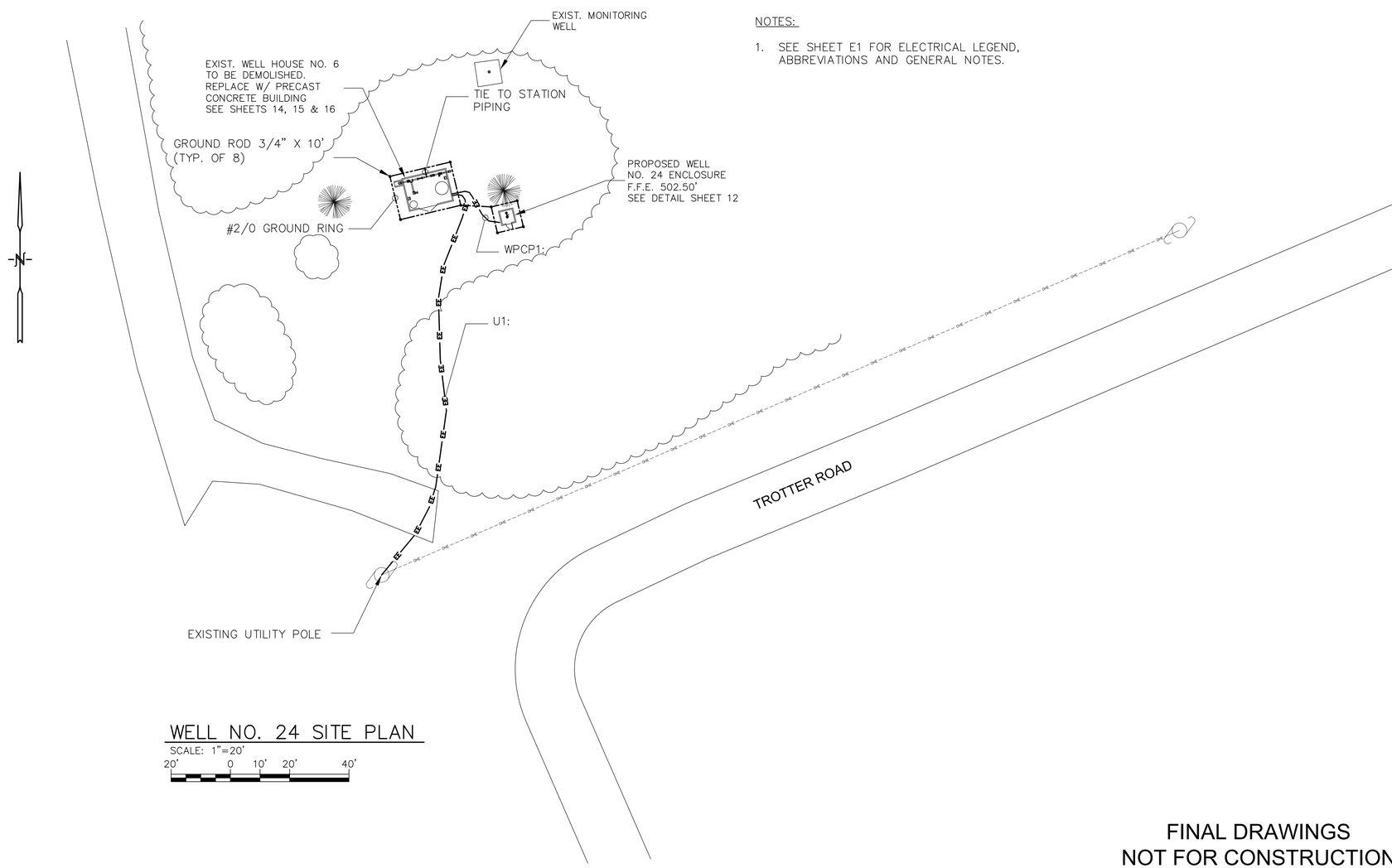

NOTES:

1. SEE SHEET E1 FOR ELECTRICAL LEGEND, ABBREVIATIONS AND GENERAL NOTES.

WELL NO. 24 SITE PLAN

SCALE: 1"=20'

20' 0 10' 20' 40'

FINAL DRAWINGS
NOT FOR CONSTRUCTION

STURGILL ENGINEERING P.A. C-3617
ONE SOUTH MAIN ST.
LEXINGTON, NC 27292
(336) 238-1249 PH.
(336) 236-6393 FAX

STURGILL ENGINEERING, P.A. PROFESSIONAL ENGINEERING CORPORATION C-1210

NORTH CAROLINA SEAL 16871 ENGINEER RANDALL W. STURGILL

02/25/16

MBD CONSULTING ENGINEERS, P.A.
1300 SECOND AVENUE
SUITE 211
CONWAY, SC 29526
Phone: (843) 488-0124
Fax: (843) 488-0129

WELL NO. 24 SITE PLAN

MOORE COUNTY PUBLIC UTILITIES
PINEHURST WELL NO. 24 AND
WELL NO. 8 REHABILITATION
PINEHURST, NORTH CAROLINA

Scale:	AS SHOWN
Date:	SEPT. 2015
Drawn:	REH
Checked:	RWS
Job No.:	14020
Sheet No.:	E5
Of:	-
Version:	1

DRAWING NAME: \\SERVER\Engineering\MBD Consulting Engineers, PA\Moore Co. Public Utilities Well #24 & #8\ELEC DWGs\E5 Electrical Site Well 24.dwg - Layout1 Feb 25, 2016 - 4:40pm

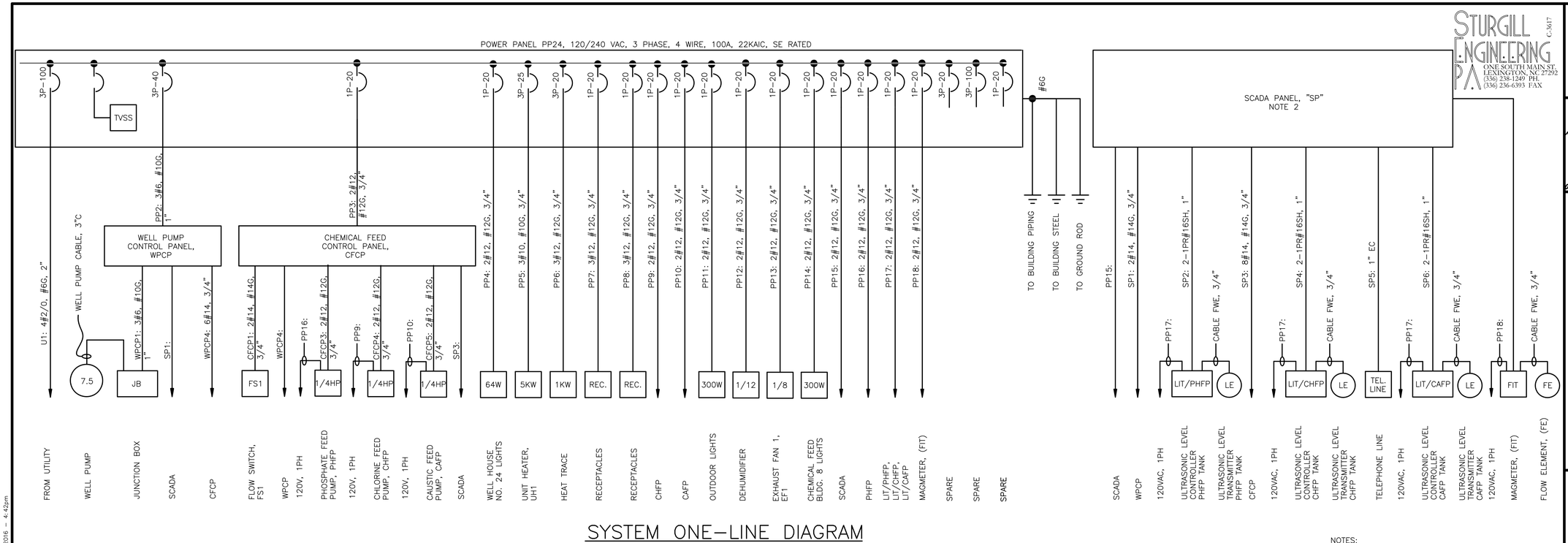

SYSTEM ONE-LINE DIAGRAM

NO SCALE

NOTES:

1. SEE SHEET E1 FOR ELECTRICAL LEGEND AND ABBREVIATIONS AND GENERAL NOTES.
2. SCADA PROVIDED BY OWNER, INSTALLED BY ELECTRICAL CONTRACTOR.

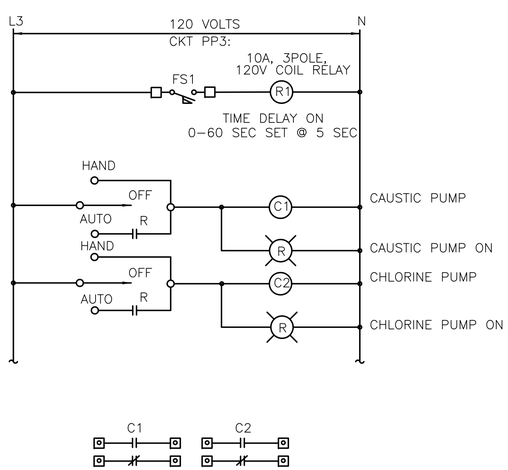

CHEMICAL FEED CONTROL PANEL, CFCP

NO SCALE (C1, C2, CONTACTS RATED FOR MOTOR SWITCHING, 1/2HP AT 120VAC.)

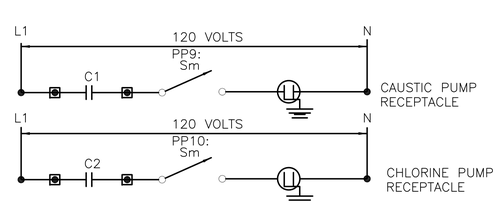

◘ TERMINAL IN CHEM PUMP PANEL

WELL CHEMICAL PUMP WIRING SCHEMATIC

NO SCALE

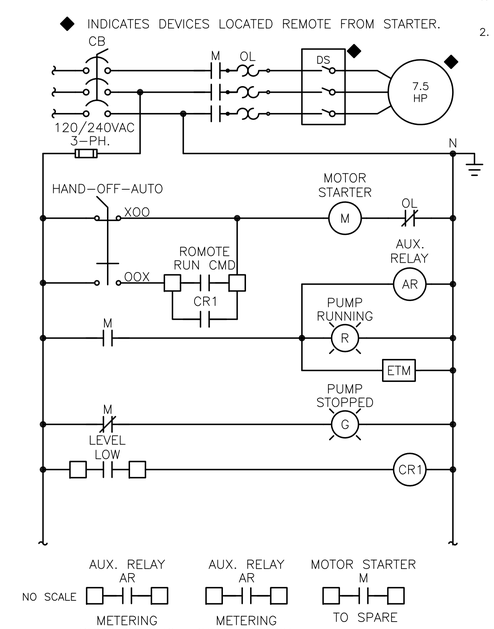

WELL PUMP CONTROL SCHEMATIC

(AR CONTACTS RATED FOR MOTOR SWITCHING, 2A AT 120VAC.)

FINAL DRAWINGS
NOT FOR CONSTRUCTION

STURGILL ENGINEERING P.A. C-3617
ONE SOUTH MAIN ST.
LEXINGTON, NC 27292
(336) 238-1240 PH.
(336) 236-6393 FAX

STURGILL ENGINEERING, P.A. C-1210 PROFESSIONAL ENGINEERING NOT TRANSFERABLE

NORTH CAROLINA SEAL 16871 ENGINEER RANDALL W. STURGILL
02/25/16

MBD CONSULTING ENGINEERS, P.A.
1300 SECOND AVENUE
SUITE 211
CONWAY, SC 29526
Phone: (843) 488-0124
Fax: (843) 488-0129

WELL 24 ELECTRICAL
ONE-LINE AND SCHEMATICS

MOORE COUNTY PUBLIC UTILITIES
PINEHURST WELL NO. 24 AND
WELL NO. 8 REHABILITATION
PINEHURST, NORTH CAROLINA

Scale:	AS SHOWN
Date:	SEPT. 2015
Drawn:	REH
Checked:	RWS
Job No.:	14020
Sheet No.:	E6
Of:	-
Version:	1

DRAWING NAME: \\SERVER\Engineering\MBD Consulting Engineers, PA\Moore Co. Public Utilities Well #24 & #8\ELEC DWGs\E6 Electrical One-line Well 24.dwg - 00 Feb 25, 2016 - 4:42pm

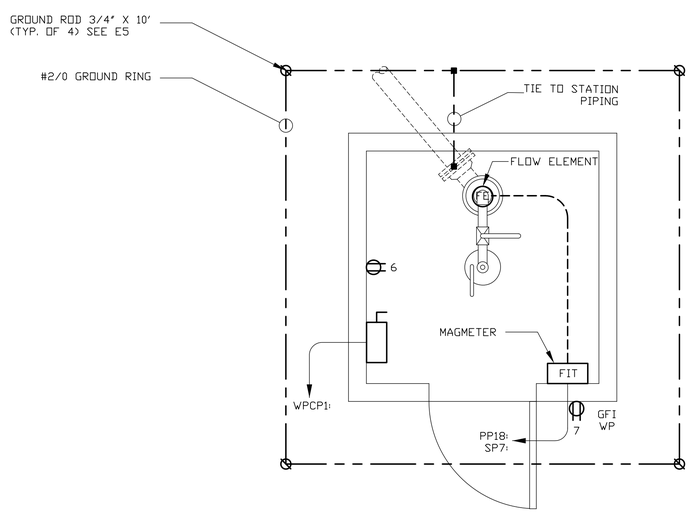

NOTES:

1. SEE SHEET E1 FOR ELECTRICAL LEGEND, ABBREVIATIONS AND GENERAL NOTES.

WELL NO. 24 POWER PLAN

SCALE: 3/4"=1'-0"

1' 6" 0 1' 2'

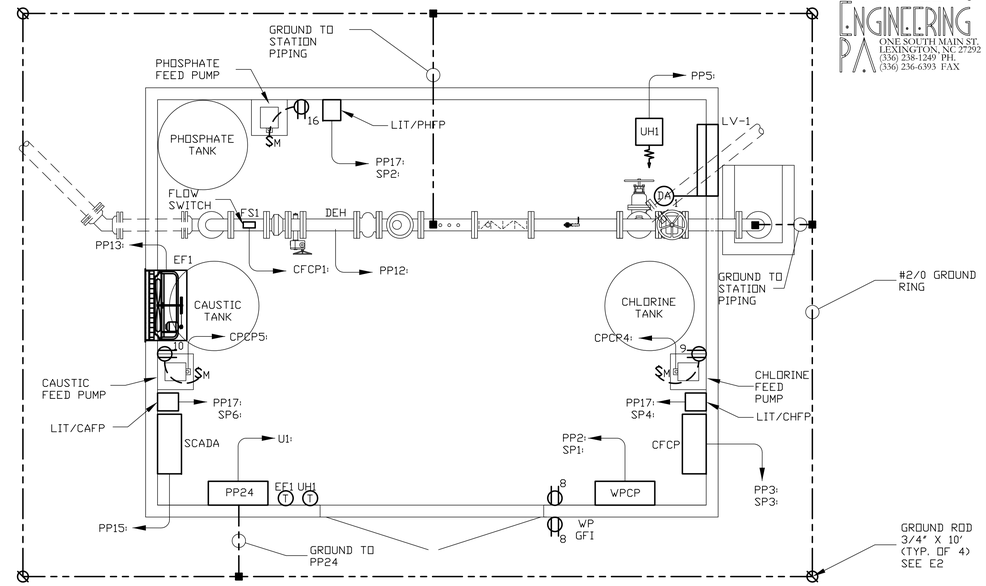

CHEMICAL FEED BLDG. 24 POWER PLAN

SCALE: 1/2"=1'-0"

2' 1' 0 2'

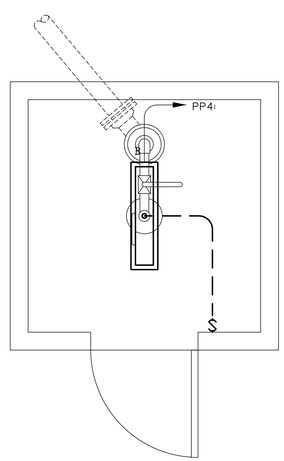

WELL NO. 24 LIGHTING PLAN

SCALE: 3/4"=1'-0"

1' 6" 0 1' 2'

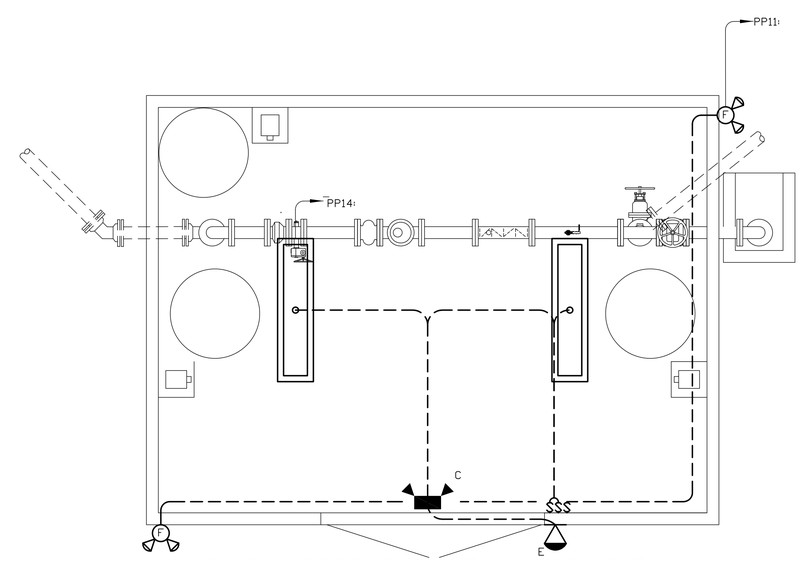

CHEMICAL FEED BLDG. 24 LIGHTING PLAN

SCALE: 1/2"=1'-0"

2' 1' 0 2'

FINAL DRAWINGS
NOT FOR CONSTRUCTION

STURGILL ENGINEERING P.A. C-3017
ONE SOUTH MAIN ST.
LEXINGTON, NC 27292
(336) 238-1249 PH.
(336) 236-6393 FAX

STURGILL ENGINEERING, P.A. PROFESSIONAL ENGINEERING C-1210 NOT TRANSFERABLE

NORTH CAROLINA SEAL 16871 ENGINEER RANDALL W. STURGILL
02/25/16

MBD CONSULTING ENGINEERS, P.A.
1300 SECOND AVENUE
SUITE 211
CONWAY, SC 29526
Phone: (843) 488-0124
Fax: (843) 488-0129

WELL 24 ELECTRICAL
LIGHTING AND POWER

MOORE COUNTY PUBLIC UTILITIES
PINEHURST WELL NO. 24 AND
WELL NO. 8 REHABILITATION
PINEHURST, NORTH CAROLINA

Scale:	AS SHOWN
Date:	SEPT. 2015
Drawn:	REH
Checked:	RWS
Job No.:	14020
Sheet No.:	E7
Of: -	Version: 1

DRAWING NAME: \\SERVER\Engineering\MBD Consulting Engineers, PA\Moore Co. Public Utilities Well #24 & #8\ELEC DWGS\E7 Electrical Lighting & Power Well 24.dwg – Layout1 (2) Feb 25, 2016 – 4:43pm

LIGHTING FIXTURE SCHEDULE

SYMBOL	LAMP / BALLAST	TOTAL POWER PER FIXTURE	MOUNTING	DESCRIPTION	MANUFACTURER'S PART NUMBER
A	ONE (1) 82 W LED / –	82 WATTS	SURFACE MOUNT ON CEILING	4' LED FIXTURE FIBERGLASS ENCLOSED WITH GASKET AND ACRYLIC PRISMATIC DIFFUSER. DAMP LABEL LISTED, 120VAC.	LITHONIA FEM4LED–9L/57–IMACD COLUMBIA LXEM4–50HL–RA–EU METALUX 4VT2–LD4–8–DR–UNV–L850–CD1–WL OR APPROVED EQUIVALENT.
B	ONE (1) 82 W LED / –	82 WATTS	SURFACE MOUNT ON CEILING	2' LED FIXTURE FIBERGLASS ENCLOSED WITH GASKET AND ACRYLIC PRISMATIC DIFFUSER. DAMP LABEL LISTED, 120VAC.	COLUMBIA LCL2–35MC–EU COLUMBIA LCR2–35ML–EU OR APPROVED EQUIVALENT.
C	TWO (2) 6W LED	12 WATTS	WALL MOUNT 8' AFF	EMERGENCY LIGHT, NEMA RATED, SEALED & GASKETED, 120VAC, w/BATTERY PACK.	LITHONIA INDX618–W–LP05VS COOPER LIGHTING UEL1–WH–SD DUAL LITE DYN6 OR APPROVED EQUIVALENT.
E	TWO (2) 3W LED	6 WATTS	WALL OR CEILING MOUNT ABOVE DOOR	EMERGENCY EGRESS LIGHT, EMERGENCY BATTERY, 2 LAMP	LITHONIA ELA–T–QWP–L0304 COOPER LIGHTING RFLED–402 DUAL LITE OCR–D–W–0603L OR EQUIVALENT.
F	TWO (2) 16W LED	32 WATTS	FLUSH MOUNT IN SOFFIT	DUAL HEAD FLOOD LIGHT FIXTURE, WET LOCATION LISTED, 120VAC.	LITHONIA OFLR–6LC–120–MO–WH COOPER LIGHTING MS–T27920L–W–ES OR APPROVED EQUIVALENT.

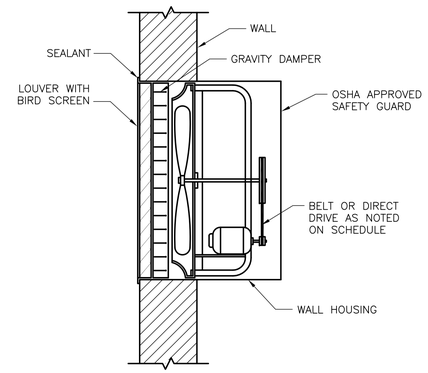

EXHAUST FAN DETAIL
NOT TO SCALE

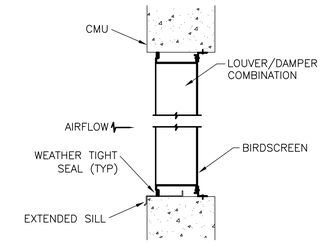

LOUVER DETAIL
NOT TO SCALE

NOTES:

1. INTAKE LOUVER SHALL BE ALUMINUM COMBINATION LOUVER DAMPER WITH DRAINABLE BLADES, INSECT SCREEN, AND DAMPER MOTOR. INTAKE LOUVER SHALL BE RUSKIN ELC6375 OR EQUAL. DAMPER MOTOR SHALL BE RATED FOR CONTINUOUS OPERATION AT 120VAC.
2. EXHAUST FAN EF–1 SHALL INCLUDE WALL HOUSING, INSECT SCREEN, GRAVITY OPERATED DAMPER, PROPELLER, MOTOR, OSHA APPROVED GUARD, MOTOR RATED DISCONNECT SWITCH, INTERNAL OVERLOAD PROTECTION,AND LINE VOLTAGE THERMOSTAT. EXHAUST FAN SHALL BE 500 CFM AT .25 IN HG, 120 VAC, 1 PHASE AS MANUFACTURED BY GREENHECK OR EQUAL. THERMOSTAT SHALL BE LINE VOLTAGE RATED, DOUBLE POLE, 1/2 HP RATED MINIMUM.
3. CONTRACTOR SHALL PROVIDE ALL LABOR, MATERIALS, TOOLS, EQUIPMENT, PERMITS, AND OPERATIONS NECESSARY FOR THE PROPER EXECUTION AND COMPLETION OF ALL ELECTRICAL WORK INDICATED ON THE DRAWINGS.
4. ALL ELECTRICAL WORK AND MATERIALS SHALL COMPLY WITH THE NEC AND OTHER APPLICABLE FEDERAL, STATE, AND LOCAL CODES. ALL ELECTRICAL EQUIPMENT SHALL BE UL LISTED OR LABELED.
5. ALL DISCONNECT SWITCHES, JUNCTION BOXES, MOTOR CONTROLLERS, AND OTHER EQUIPMENT REQUIRING ELECTRICAL POWER CONNECTION SHALL BE MARKED WITH VOLTAGE PRESENT, AS APPROPRIATE TO DESIGNATE 120, 208, 240, 277, 480, 12,470 VOLTS AND SINGLE OR THREE PHASE, AS APPLICABLE.
6. WIRE SHALL BE STRANDED COPPER WITH TYPE THHN/THWN 600V INSULATION. CONDUCTORS SHALL BE COLOR CODED BLACK, RED, WHITE, AND GREEN ON 120/240 VOLT SYSTEMS AND BROWN, ORANGE, YELLOW, GRAY, AND GREEN ON 480Y/277 VOLT SYSTEMS. A GROUNDING CONDUCTOR SHALL BE INSTALLED IN EVERY CONDUIT.
7. CONTRACTOR SHALL BE RESPONSIBLE FOR ROUTING ALL CONDUITS. ALL CONDUIT SHALL BE CONCEALED WHERE POSSIBLE.
8. CONTRACTOR SHALL VERIFY ALL EQUIPMENT LOCATIONS AND CONNECTION POINTS PRIOR TO INSTALLATION.
9. FUSED DISCONNECT SWITCHES SHALL BE HEAVY DUTY RATED 600 VOLT, 3 PHASE, WITH NEMA 1 ENCLOSURE AND TIME–DELAY FUSES.
10. TRANSIENT VOLTAGE SURGE SUPPRESSION (TVSS) SHALL BE SUITABLE FOR USE ON A 480Y/277V GROUNDED WYE SYSTEM, AND SHALL HAVE AN IMPULSE SPARKOVER VOLTAGE OF 1500 V ON A VOLTAGE SURGE OF EITHER POLARITY HAVING A RATE–OF–RISE OF 10,000 VOLTS PER MICROSECOND. MINIMUM LIFE SHALL BE 2000 CURRENT SURGES OF 5,000 AMPERES ON A 10 X 20 MICROSECOND WAVESHAPE, AND THE SUBSEQUENT POWER–FOLLOW CURRENT, PER PHASE. TVSS SHALL BE MOUNTED DIRECTLY BELOW OR BESIDE THE MANUAL TRANSFER SWITCH AND CONNECTED TO THE LOAD SIDE TERMINALS OF THE MTS.
11. UNLESS OTHERWISE NOTED, MOUNT LIGHT SWITCHES AND CONVENIENCE RECEPTACLES 45" ABOVE FINISHED FLOOR. ALL CONVENIENCE RECEPTACLES SHALL HAVE GROUND FAULT PROTECTION.
12. THE WELL PUMP MOTOR STARTER SHALL BE A NEMA SIZE 1 COMBINATION CIRCUIT BREAKER MOTOR STARTER. THE MOTOR STARTER SHALL INCLUDE AN OVERSIZED NEMA 12 ENCLOSURE, CIRCUIT BREAKER WITH ADJUSTABLE INSTANTANEOUS TRIP, FULL VOLTAGE, NON–REVERSING NEMA RATED CONTACTOR WITH TWO EXTRA SETS OF AUXILIARY CONTACTS, OVERLOAD RELAY WITH AMBIENT TEMPERATURE COMPENSATION, CONTROL POWER TRANSFORMER WITH OVERCURRENT PROTECTION, AUXILIARY RELAY, NON–RESETTABLE SIX–DIGIT ELAPSED TIME METER, 30MM OPERATOR CONTROLS, AND INDICATORS AS INDICATED ON THE DRAWING. THE AUXILIARY RELAY SHALL HAVE CONTACTS RATED 1/2HP AT 120VAC FOR CONTROL OF THE CHEMICAL FEED PUMPS.
13. PRESSURE SWITCH SHALL BE B/W CONTROLS 09–132000 OR EQUAL.
14. WELL PUMP DISCONNECT SWITCH SHALL BE 3 POLE, 30 AMPERES, HEAVY DUTY, NEMA 4X SS, POST MOUNTED NEAR WELL.

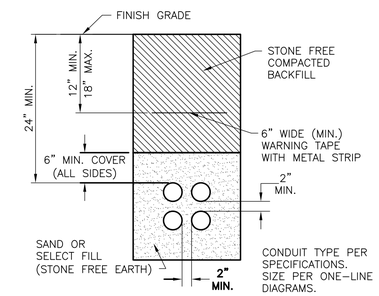

TYPICAL DIRECT BURIED CONDUIT SECTION
NOT TO SCALE

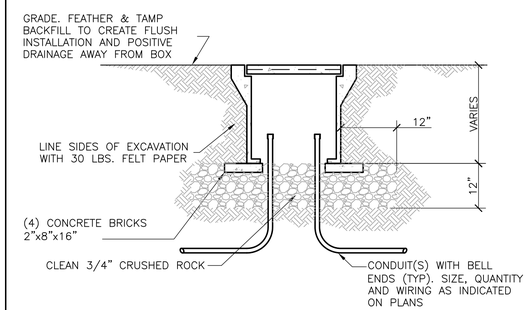

UNDERGROUND CONCRETE PULL BOX
NOT TO SCALE

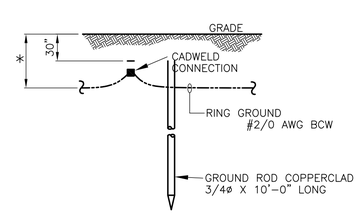

* 2'–6" OR 6" BELOW FROST LINE, WHICHEVER IS DEEPER

GROUND ROD DETAIL
NOT TO SCALE

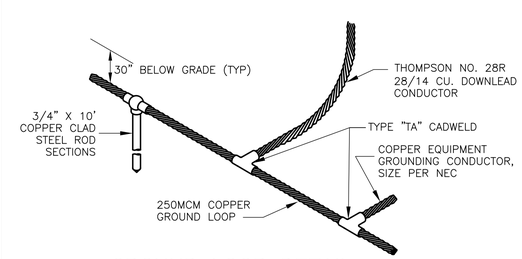

GROUND LOOP DETAIL
NOT TO SCALE

FINAL DRAWINGS
NOT FOR CONSTRUCTION

STURGILL ENGINEERING P.A. C-3617
ONE SOUTH MAIN ST.
LEXINGTON, NC 27292
(336) 238-1240 PH.
(336) 236-6393 FAX

STURGILL ENGINEERING, P.A. C-1210 PROFESSIONAL ENGINEERING NO. 1 ESTABLISHED 1946

CARLA CARR SEALA 22681 PROFESSIONAL ENGINEER NORTH CAROLINA
04/25/16

MBD CONSULTING ENGINEERS, P.A.
1300 SECOND AVENUE
SUITE 211
CONWAY, SC 29526
Phone: (843) 488-0124
Fax: (843) 488-0129

ELECTRICAL DETAILS

MOORE COUNTY PUBLIC UTILITIES
PINEHURST WELL NO. 24 AND
WELL NO. 8 REHABILITATION
PINEHURST, NORTH CAROLINA

Scale:	AS SHOWN
Date:	SEPT. 2015
Drawn:	REH
Checked:	RWS
Job No.:	14020
Sheet No.:	E8
Of:	-
Version:	1

DRAWING NAME: \\SERVER\Engineering\MBD Consulting Engineers, PA\Moore Co. Public Utilities Well #24 & #8\ELEC DWGs\EB Misc. Details.dwg – .00 Feb 25, 2016 – 4:44pm