SEABOARD STREET
WATER LINE REPLACEMENT

Vass, NC

SEPTEMBER 2015

Project Area

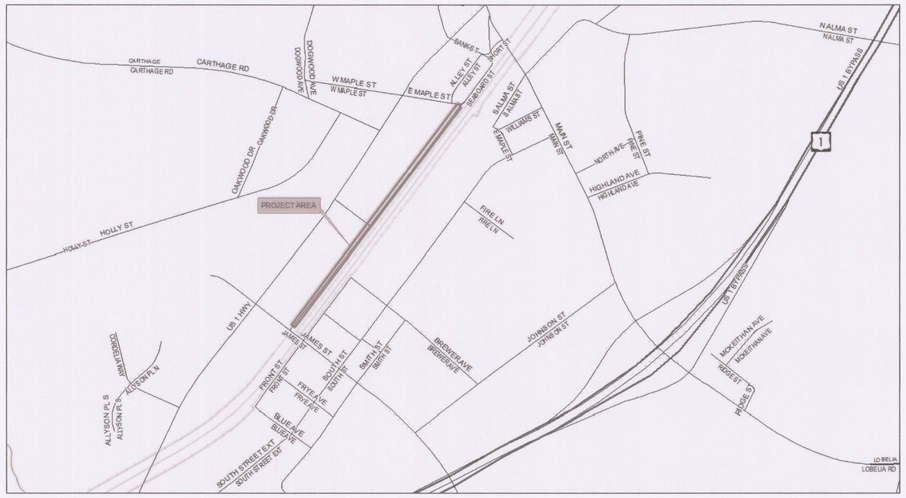

Vicinity Map

DRAWING SCHEDULE

G1	COVER SHEET
G2	GENERAL NOTES
C1	PLAN STA 0+00 TO 11+50
C2	PLAN STA 11+50 TO 23+50
C3	PLAN STA 23+50 TO 26+99
C4	CONSTRUCTION DETAILS
C5	CONSTRUCTION DETAILS
C6	CONSTRUCTION DETAILS

MOORE COUNTY PUBLIC WORKS

www.moorecountync.gov
5227 HWY 15-501
P.O. BOX 1927
CARTHAGE, NC 28327
(910) 947-6315

CALL BEFORE YOU DIG!
NC ONE CALL CENTER

811 or 1-800-632-4949
CALL THREE DAYS
BEFORE DIGGING

NORTH CAROLINA PROFESSIONAL SEAL ENGINEER

6/3/16

LEGEND

PROPOSED WATER LINE	
EXISTING WATER LINE	W W
EXISTING SANITARY SEWER LINE	SS SS
EXISTING OVERHEAD POWER LINE	P P
RIGHT OF WAY	
EXISTING FIRE HYDRANT	
EXISTING GATE VALVE	
PROPOSED GATE VALVE	
PROPOSED TEE	
PROPOSED VALVE MARKER	
EXISTING POWER POLE	
EXISTING SANITARY SEWER MANHOLE	S
EXISTING WATER METER BOX AND SERVICE LINE	MB W
EXISTING TELEPHONE PEDESTAL	PED
PROPOSED CHECK DAM	
EXISTING BUILDING STRUCTURE	
EXISTING SAND/GRAVEL DRIVEWAY	
EXISTING PARKING LOT ASPHALT	
PROPOSED PAVEMENT CUT	
EXISTING ROADWAY	

GENERAL CONSTRUCTION NOTES

1.) CONTRACTOR SHALL REPAIR ALL DISTURBED AREAS TO EQUAL OR BETTER CONDITION THAN THE ORIGINAL SITE, OR AS NOTED.

2.) LOCATIONS OF EXISTING UTILITIES AS SHOWN ARE APPROXIMATE ONLY. EXACT LOCATIONS ARE TO BE VERIFIED IN THE FIELD BY THE CONTRACTOR. AT LEAST THREE DAYS PRIOR TO CONSTRUCTION CONTRACTOR MUST NOTIFY MOORE COUNTY PUBLIC WORKS, (MCPW) (910)947-6315 AND CALL BEFORE YOU DIG, NORTH CAROLINE ONE CALL (1-800-632-4949).

3.) CONTRACTOR SHALL NOTIFY MCPW AFTER EXISTING BURIED UTILITIES HAVE BEEN LOCATED AND 24 HOURS PRIOR TO CONSTRUCTION.

4.) CONTRACTOR MUST PROVIDE EROSION CONTROL DEVICES TO CONTROL RUNOFF FROM THE CONSTRUCTION SITE. CONTRACTOR WILL BE RESPONSIBLE FOR ANY FINES THAT MAY BE LEVIED DUE TO POLLUTION CREATED DURING CONSTRUCTION.

5.) CONTRACTOR SHALL FOLLOW ALL FEDERAL, STATE, AND LOCAL REGULATIONS PERTAINING TO CONSTRUCTION OPERATIONS.

6.) WATER AND SEWER LINES SHALL HAVE A MINIMUM 10' HORIZONTAL SEPARATION OR A MINIMUM 18' VERTICAL SEPARATION WITH THE WATER OVER SEWER, OR BOTH WATER AND SEWER LINES SHALL BE DUCTILE IRON PIPE 10' EITHER SIDE OF THE CROSSING. WATER AND STORM SEWER LINES SHALL HAVE A MINUMUM 24" VERTICAL SEPARATION.

7.) WATER LINES SHALL HAVE 3' MINIMUM COVER UNLESS OTHERWISE SHOWN ON THE DRAWINGS.

8.) ALL TRAFFIC CONTROL SHALL CONFORM TO THE REQUIREMENTS OF THE NORTH CAROLINA DEPARTMENT OF TRANSPORTATION.

9.) CONTRACTOR SHALL BE RESPONSIBLE FOR ANY DAMAGE TO EXISTING ROADS DURING CONSTRUCTION AND SHALL REPAIR ROADS PER REQUIREMENTS OF THE NORTH CAROLINA DEPARTMENT OF TRANSPORTATION.

10.) ALL CONSTRUCTION ACTIVITIES SHALL OCCUR WITHIN EASEMENTS OR THE EXISTING ROAD RIGHT-OF-WAY.

11.) MCPW REQUIRES A MINIMUM OF FORTY-EIGHT (48) HOURS OF NOTICE WHEN REQUESTING AN ENGINEERING INSPECTION. INSPECTION REQUESTS MAY BE MADE BY CALLING THE MCPW ENGINEERING DEPARTMENT AT (910)947-6315.

12.) THE CONTRACTOR SHALL KEEP A CLEAN LEGIBLE COPY OF THE AUTHORIZATION TO CONSTRUCT AND 1 SET OF RECORD DRAWINGS ON SITE AT ALL TIMES. RECORD DRAWINGS SHALL BE CHECKED WEEKLY.

13.) ALL CONSTRUCTION METHODS AND MATERIALS SHALL BE IN ACCORDANCE WITH THE MCPW, STANDARDS AND SPECIFICATIONS.

14.) ALL SOIL EROSION CONTROL MEASURES SHALL BE PERFORMED PRIOR TO GRADING, CLEARING, OR GRUBBING. ALL EROSION CONTROL DEVICES SUCH AS SILT FENCES, ETC., SHALL BE MAINTAINED IN WORKABLE CONDITION FOR THE LIFE OF THE PROJECT AND SHALL BE REMOVED AT THE COMPLETION OF THE PROJECT ONLY ON THE MCPW APPROVAL. DURING THE LIFE OF THE PROJECT, IF A STORM CAUSES SOIL EROSION WHICH CHANGES FINISH GRADES OR CREATES "GULLIES" AND "WASHED AREAS", THESE SHALL BE REPAIRED AT NO EXTRA COST AND ALL SILT WASHED OFF OF THE PROJECT SITE ONTO ADJACENT PROPERTY SHALL BE REMOVED AS DIRECTED BY MCPW AT NO EXTRA COST.

15.) CLEARING AND GRUBBING WASTES SHALL BE REMOVED FROM THE SITE AND PROPERLY DISPOSED OF BY THE CONTRACTOR AT NO EXTRA COST, UNLESS SPECIFIED OTHERWISE.

16.) IN THE EVENT EXCESSIVE GROUNDWATER OR SPRINGS ARE ENCOUNTERED WITHIN THE LIMITS OF CONSTRUCTION, THE CONTRACTOR SHALL INSTALL NECESSARY UNDER DRAINS AND STONE AS DIRECTED BY MCPW.

17.) ALL AREAS WHERE THERE IS EXPOSED DIRT SHALL BE SEEDED, FERTILIZED, AND MULCHED ACCORDING TO THE SPECIFICATIONS. THE FINISHED SURFACE SHALL BE TO GRADE AND SMOOTH, FREE OF ALL ROCKS LARGER THAN 3", EQUIPMENT TRACKS, DIRT CLODS, BUMPS, RIDGES AND GOUGES PRIOR TO SEEDING. THE SURFACE SHALL BE LOOSENED TO A DEPTH OF ±4"-6" TO ACCEPT SEED. THE CONTRACTOR SHALL NOT PROCEED WITH SEEDING OPERATIONS WITHOUT FIRST OBTAINING MCPW APPROVAL OF THE GRADED SURFACE. ALL SEEDING SHALL BE PERFORMED BY A MECHANICAL "HYDRO-SEEDER". HAND SEEDING SHALL BE AUTHORIZED ON AN AREA BY AREA APPROVAL BY MCPW.

18.) ALL WATER LINES SHALL BE PRESSURE TESTED AT 200 PSI FOR 24 HOURS. A MINIMUM FORTY EIGHT (48) HOURS NOTICE SHALL BE GIVEN TO MCPW BEFORE TESTING.

19.) CONTRACTOR IS RESPONSIBLE FOR BACTERIOLOGICAL TESTING. TEST SAMPLES MUST BE COLLECTED WITHIN 24 HOURS AFTER FLUSHING IS COMPLETE IN THE PRESENCE OF MCPW.

MOORE COUNTY PUBLIC WORKS
www.moorecountync.gov
5227 HWY 15-501
P.O. BOX 1927
CARTHAGE, NC 28327
(910) 947-6315

SEABOARD STREET
WATER LINE REPLACEMENT
VASS, NC

DATE: JUNE 2015
DESIGNED BY: MHS
CADD BY: LSD

GENERAL NOTES

REVISIONS

NO.	DATE	BY	DESCRIPTION

SHEET

G2

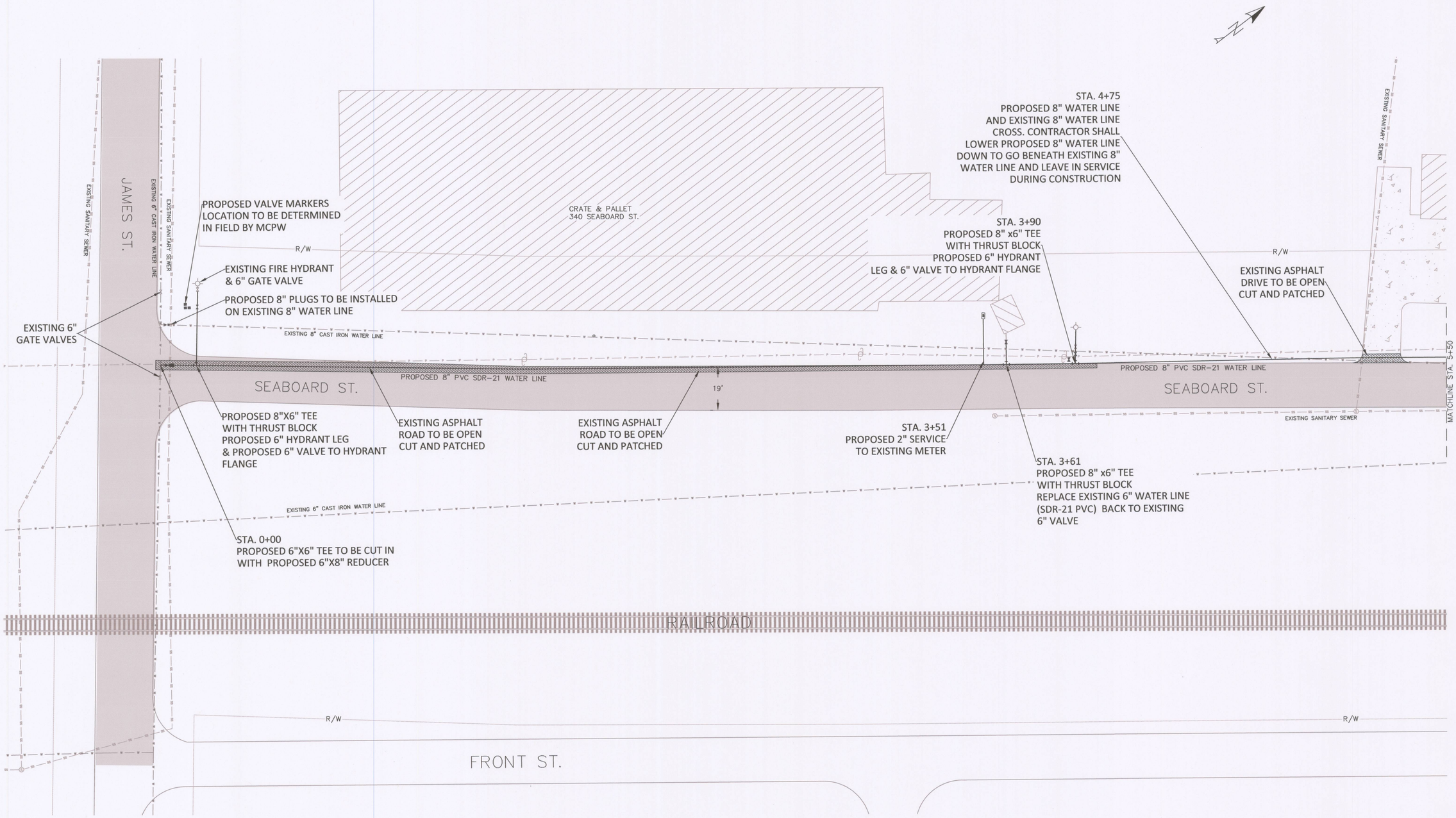

CALL BEFORE YOU DIG!
NC ONE CALL CENTER
811 or 1-800-632-4949
CALL THREE DAYS BEFORE DIGGING

0 10 20 40 Feet
SCALE: 1" = 20'

MOORE COUNTY PUBLIC WORKS
www.moorecountync.gov
5227 HWY 15-501
P.O. BOX 1927
CARTHAGE, NC 28327
(910) 947-6315

SEABOARD STREET WATER LINE REPLACEMENT
VASS, NC

DATE: JUNE 2015
DESIGNED BY: MHS
CADD BY: LSD

PLAN
STATION 0+00 TO 11+50

REVISIONS

NO.	DATE	BY	DESCRIPTION
1	05/26/16	MHS	PLUGS ADDED ON EXISTING, 3" CHOD TAPPING SLEEVE REMOVED & REPLACED WITH TEE

SHEET
C1

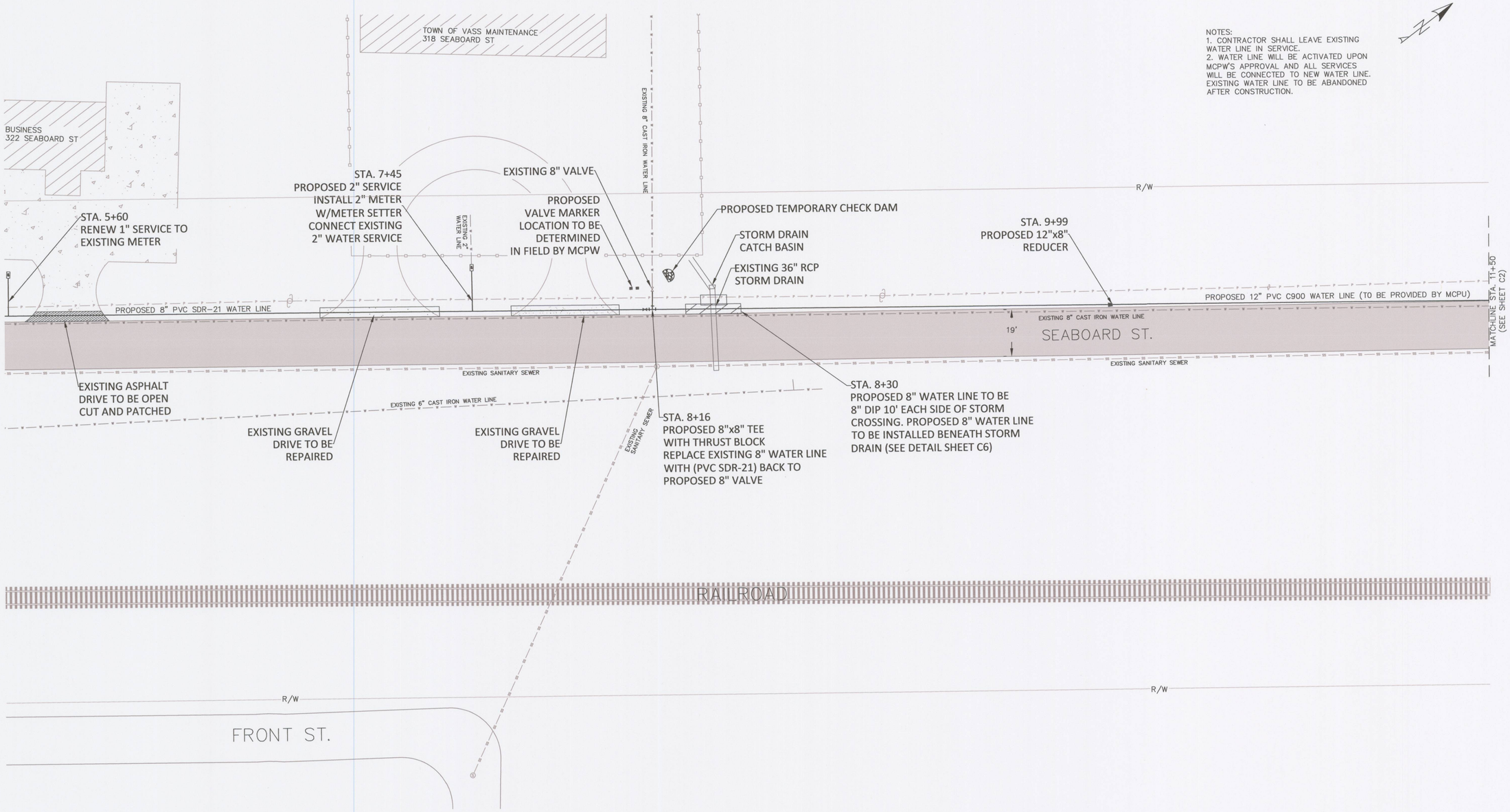

NOTES:
1. CONTRACTOR SHALL LEAVE EXISTING WATER LINE IN SERVICE.
2. WATER LINE WILL BE ACTIVATED UPON MCPW'S APPROVAL AND ALL SERVICES WILL BE CONNECTED TO NEW WATER LINE. EXISTING WATER LINE TO BE ABANDONED AFTER CONSTRUCTION.

CALL BEFORE YOU DIG!
NC ONE CALL CENTER
811 or 1-800-632-4949
CALL THREE DAYS
BEFORE DIGGING

0 10 20 40 Feet
SCALE: 1" = 20'

MOORE COUNTY PUBLIC WORKS
www.moorecountync.gov
5227 HWY 15-501
P.O. BOX 1927
CARTHAGE, NC 28327
(910) 947-6315

SEABOARD STREET
WATER LINE REPLACEMENT
VASS, NC

DATE: JUNE 2015
DESIGNED BY: MHS
CADD BY: LSD

PLAN
STATION 0+00 TO 11+50

REVISIONS

NO.	DATE	BY	DESCRIPTION

SHEET
C2

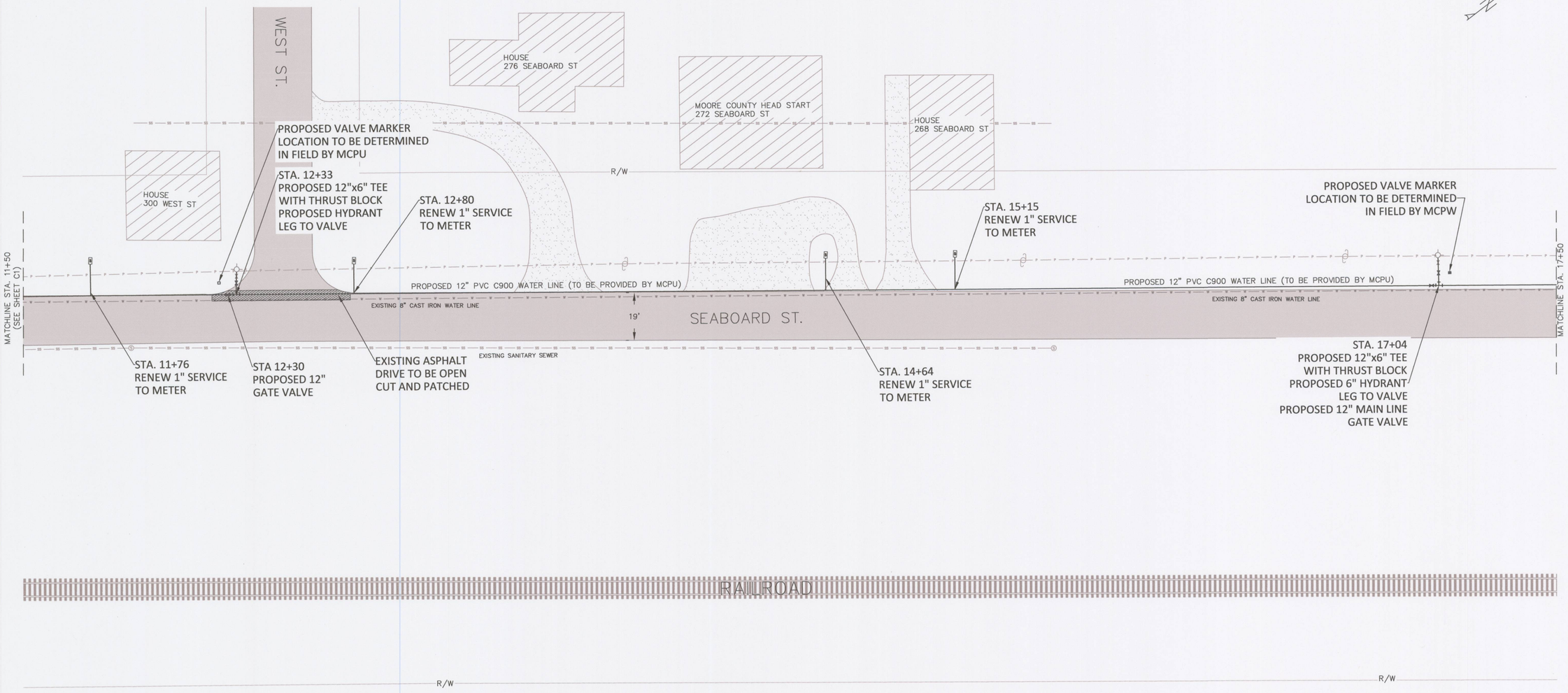

CALL BEFORE YOU DIG!
NC ONE CALL CENTER

811 or 1-800-632-4949
CALL THREE DAYS
BEFORE DIGGING

0 10 20 40 Feet
SCALE: 1" = 20'

MOORE COUNTY PUBLIC WORKS
www.moorecountync.gov
5227 HWY 15-501
P.O. BOX 1927
CARTHAGE, NC 28327
(910) 947-6315

SEABOARD STREET
WATER LINE REPLACEMENT
VASS, NC

DATE: JUNE 2015
DESIGNED BY: MHS
CADD BY: LSD

PLAN
STATION 11+50 TO 23+50

REVISIONS

NO.	DATE	BY	DESCRIPTION

SHEET

C3

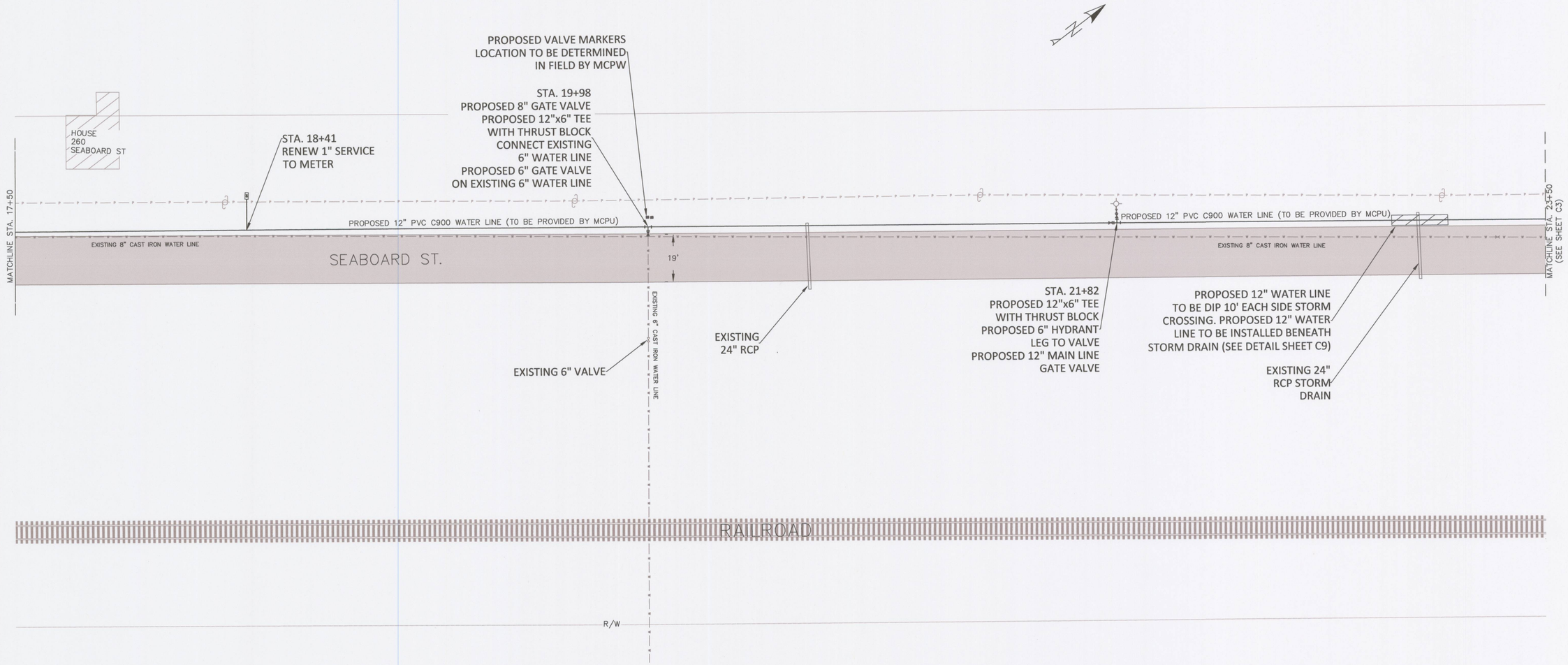

CALL BEFORE YOU DIG!
NC ONE CALL CENTER

811 or 1-800-632-4949
CALL THREE DAYS
BEFORE DIGGING

0 10 20 40 Feet
SCALE: 1" = 20'

MOORE COUNTY PUBLIC WORKS
www.moorecountync.gov
5227 HWY 15-501
P.O. BOX 1927
CARTHAGE, NC 28327
(910) 947-6315

SEABOARD STREET
WATER LINE REPLACEMENT
VASS, NC

DATE: JUNE 2015
DESIGNED BY: MHS
CADD BY: LSD

PLAN
STATION 11+50 TO 23+50

REVISIONS

NO.	DATE	BY	DESCRIPTION
1	05/26/16	MHS	STA 11+41 MAIN LINE VALVE ADDED

SHEET

C4

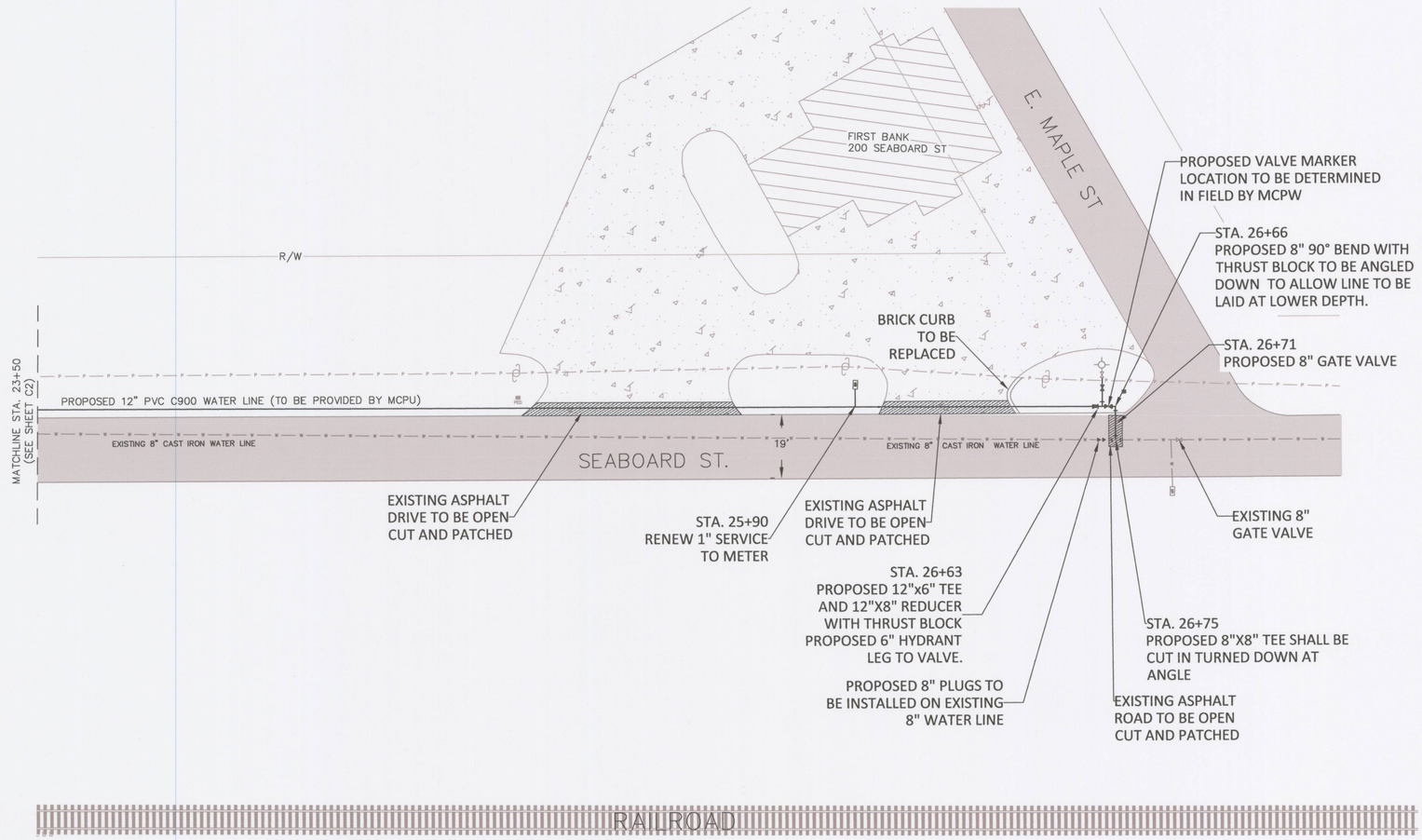

CALL BEFORE YOU DIG!
NC ONE CALL CENTER

811 or 1-800-632-4949
CALL THREE DAYS
BEFORE DIGGING

0 10 20 40 Feet
SCALE: 1" = 20'

MOORE COUNTY PUBLIC WORKS
www.moorecountync.gov
5227 HWY 15-501
P.O. BOX 1927
CARTHAGE, NC 28327
(910) 947-6315

SEABOARD STREET
WATER LINE REPLACEMENT
VASS, NC

DATE: JUNE 2015
DESIGNED BY: MHS
CADD BY: LSD

PLAN
STATION 23+50 TO 26+75

REVISIONS

NO.	DATE	BY	DESCRIPTION
1	05/26/16	MHS	STA. 26+66 REDUCER ADDED

SHEET

C5

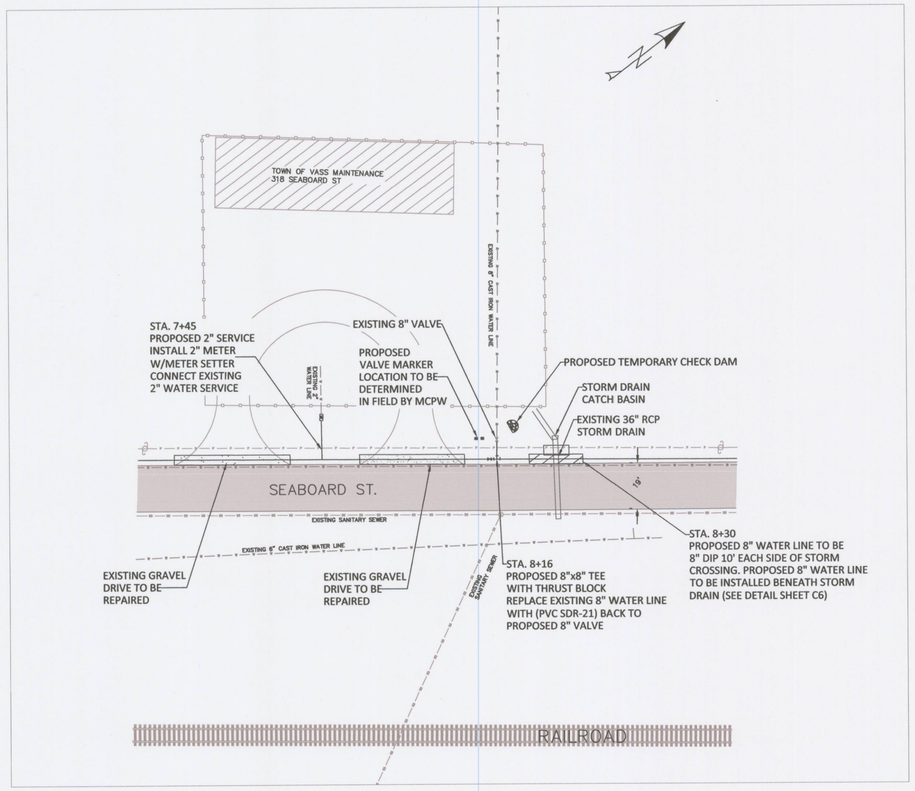

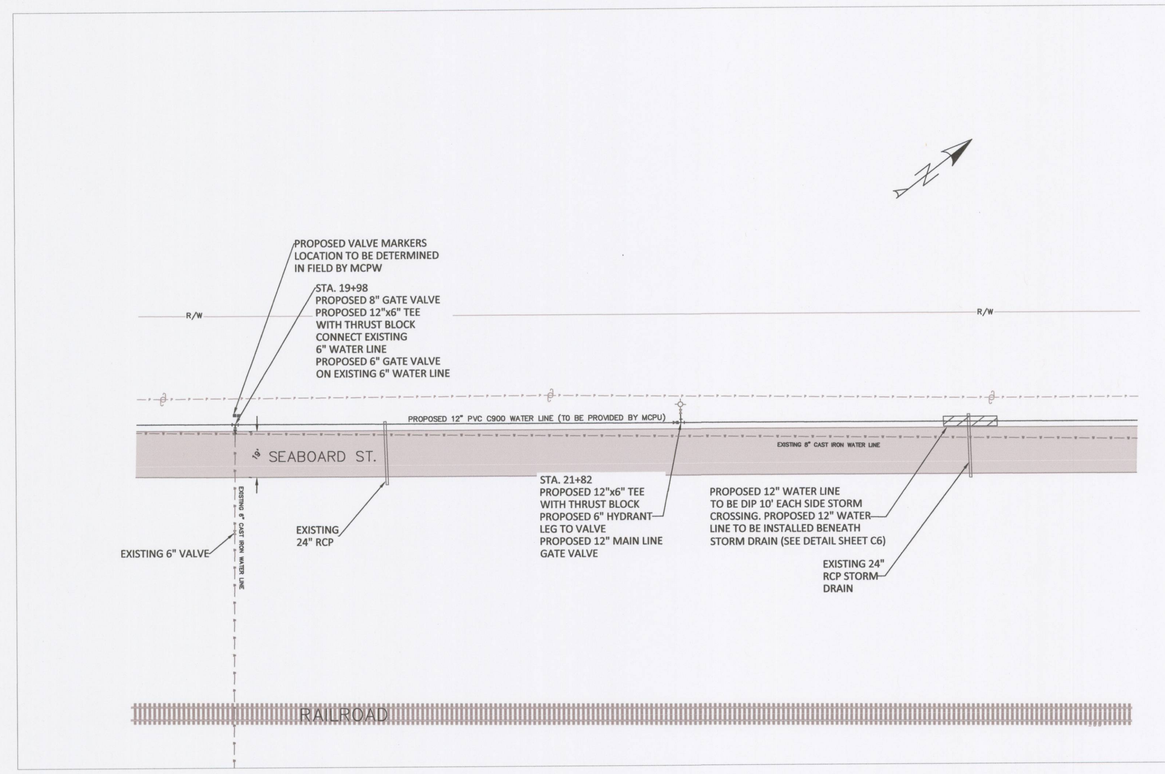

CALL BEFORE YOU DIG!
NC ONE CALL CENTER
811 or 1-800-632-4949
CALL THREE DAYS
BEFORE DIGGING

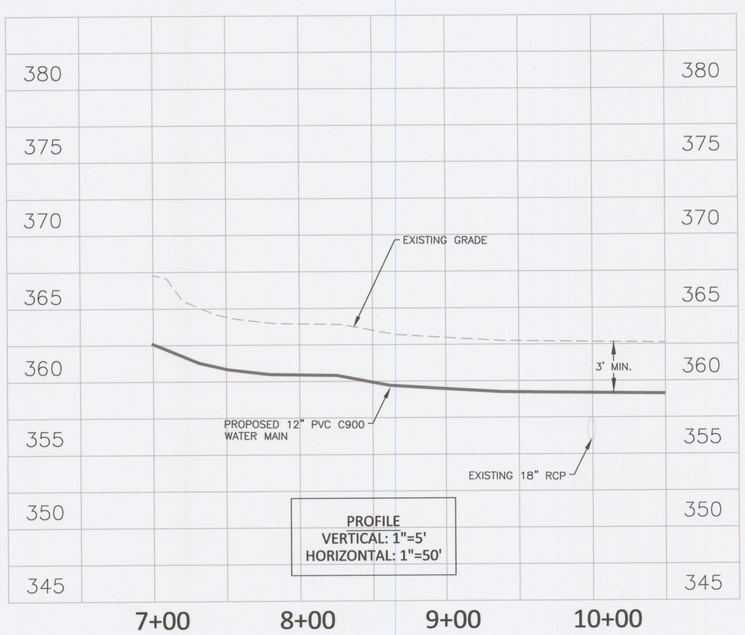

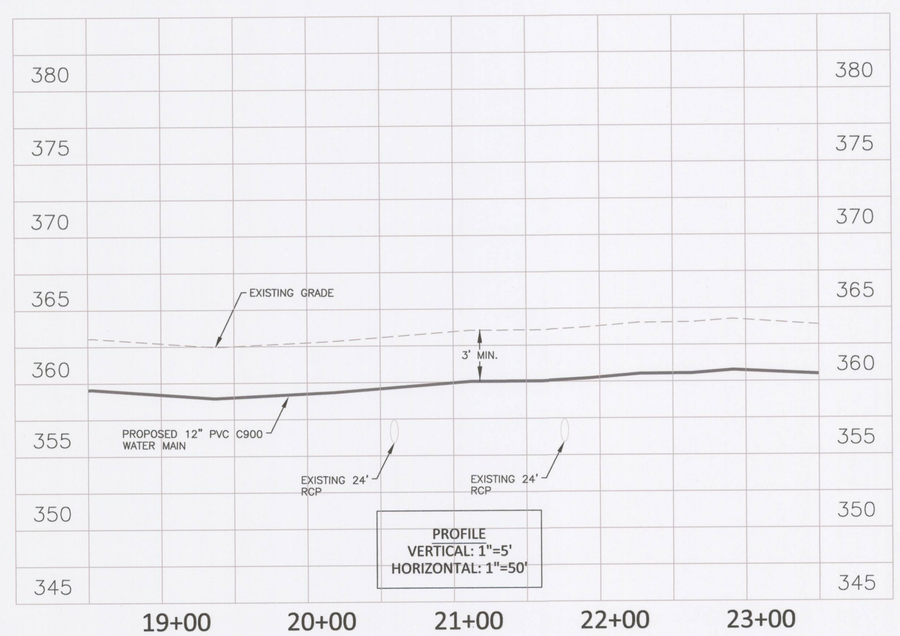

MOORE COUNTY PUBLIC WORKS
www.moorecountync.gov
5227 HWY 15-501
P.O. BOX 1927
CARTHAGE, NC 28327
(910) 947-6315

SEABOARD STREET WATER LINE REPLACEMENT
VASS, NC

DATE: JUNE 2015
DESIGNED BY: MHS
CADD BY: LSD

PLAN
STA. TO STA.

REVISIONS

NO.	DATE	BY	DESCRIPTION
1	05/26/16	MHS	STA 21+82 MAIN LINE VALVE ADDED

SHEET
C6

EROSION AND SEDIMENT CONTROL NOTES:

1. UNLESS OTHERWISE INDICATED, ALL VEGETATION AND STRUCTURAL EROSION AND SEDIMENT CONTROL PRACTICES WILL BE CONSTRUCTED AND MAINTAINED ACCORDING TO MINIMUM STANDARDS AND SPECIFICATIONS OF THE EROSION & SEDIMENT CONTROL PLANNING & DESIGN MANUAL & ACCORDING TO THE SPECIFICATIONS.

2. ALL HARD SURFACE PUBLIC ROADS SHALL BE CLEAN AT THE END OF EACH WORK DAY. PROVIDE TEMPORARY CONSTRUCTION ENTRANCES AT THE LOCATIONS SHOWN ON THE PLANS OR AS OTHERWISE NECESSARY.

3. THE LOCATION OF ALL EROSION AND SEDIMENT CONTROL MEASURES ARE APPROXIMATE. THESE DEVICES SHALL BE LOCATED TO ACHIEVE MAXIMUM BENEFIT. IF DURING CONSTRUCTION THESE DEVICES ARE NOT SUFFICIENT TO ADEQUATELY CONTROL EROSION AND SEDIMENTATION, ADDITIONAL EROSION CONTROL DEVICES SHALL BE INSTALLED AS DIRECTED BY THE ENGINEER.

4. ALL TEMPORARY EROSION AND SEDIMENT CONTROL MEASURES SHALL BE REMOVED AND DISPOSED OF WITHIN 30 DAYS AFTER FINAL SITE STABILIZATION.

5. CONTRACTOR SHALL TAKE ALL STEPS NECESSARY TO PREVENT SEDIMENT (GENERATED BY CONSTRUCTION OR EROSION) FROM ENTERING STREAMS. CONSTRUCTION VEHICLES WILL NOT BE ALLOWED IN FLOWING STREAM CHANNELS OR TO DAMAGE THEIR BANKS. TEMPORARY STREAM CROSSINGS SHALL BE INSTALLED IN ALL FLOWING STREAMS WHICH WILL HAVE CONSTRUCTION TRAFFIC CROSSING THEM.

6. STOCKPILING OF EXCESS MATERIALS IN WETLAND AREAS IS NOT ALLOWED.

7. IN GENERAL, ALL EROSION AND SEDIMENT CONTROL MEASURES SHALL BE CHECKED AFTER EACH RAINFALL OR WEEKLY, WHICHEVER IS MORE FREQUENT (AT LEAST DAILY DURING PERIODS OF PROLONGED RAINFALL). CONTRACTOR SHALL CLEAN AND REPAIR ACCORDINGLY.

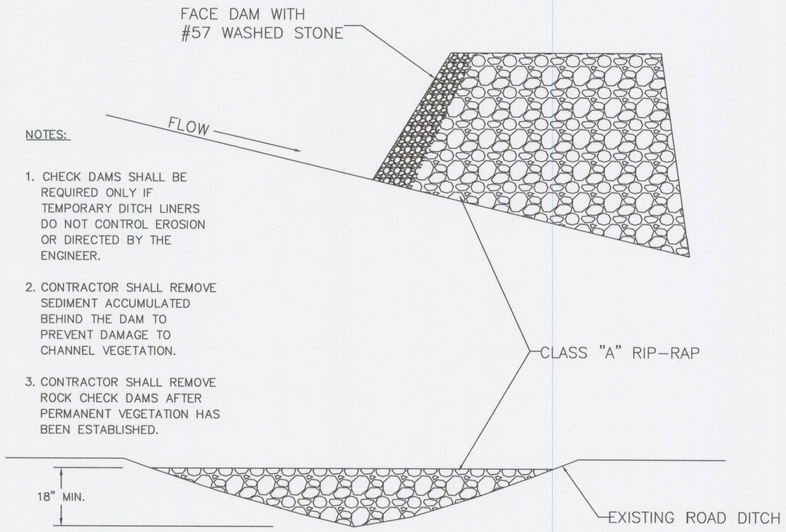

NOTES:

1. CHECK DAMS SHALL BE REQUIRED ONLY IF TEMPORARY DITCH LINERS DO NOT CONTROL EROSION OR DIRECTED BY THE ENGINEER.

2. CONTRACTOR SHALL REMOVE SEDIMENT ACCUMULATED BEHIND THE DAM TO PREVENT DAMAGE TO CHANNEL VEGETATION.

3. CONTRACTOR SHALL REMOVE ROCK CHECK DAMS AFTER PERMANENT VEGETATION HAS BEEN ESTABLISHED.

CHECK DAM DETAIL

NOT TO SCALE

NOTES:

1. THE CONTRACTOR SHALL CONTACT THE POWER CO., GAS CO., AND TELEPHONE CO. FOR THE EXACT LOCATION OF ALL UNDERGROUND MAINS, CABLES, OR LINES BEFORE CONSTRUCTION BEGINS.

2. PIPE SEPARATION: THE FOLLOWING MINIMUM PIPE SEPARATION WILL BE MAINTAINED: 12 INCHES VERTICAL SEPARATION BETWEEN CROSSING OF SANITARY SEWER AND STORM SEWERS 18 INCHES VERTICAL SEPARATION BETWEEN CROSSING OF SEWER (INCLUDING FORCE MAINS) AND WATER MAINS, AND 10 FEET HORIZONTAL SEPARATION BETWEEN SANITARY SEWER (INCLUDING FORCE MAINS) AND WATER MAINS. IF THESE SEPARATIONS CANNOT BE MAINTAINED, DUCTILE IRON PIPE WILL BE USED 10 FEET EITHER SIDE OF CROSSING AND ALONG ENTIRE LENGTH OF LINE LESS THAN 10 HORIZONTAL FEET FROM WATER MAINS. THE CONTRACTOR SHALL RECEIVE APPROVAL FROM THE ENGINEER IN THE FIELD BEFORE PAYMENT WILL BE MADE AT DUCTILE IRON PRICES.

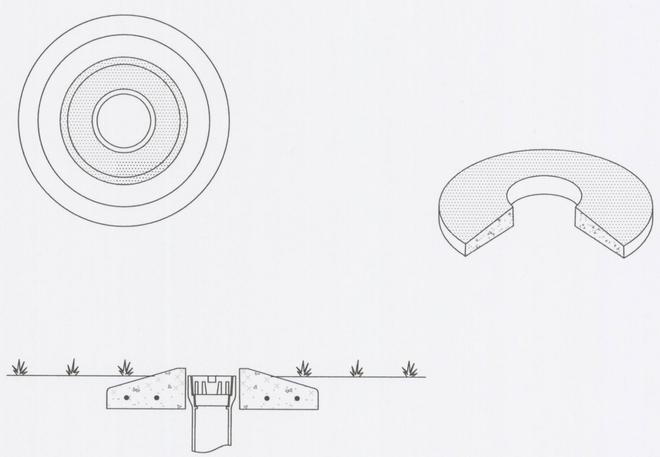

CONCRETE PROTECTOR RING

NOT TO SCALE

NOTE: ALL PAVEMENT SHALL BE REPAIRED WITHIN THE SAME WEEK IT IS CUT.

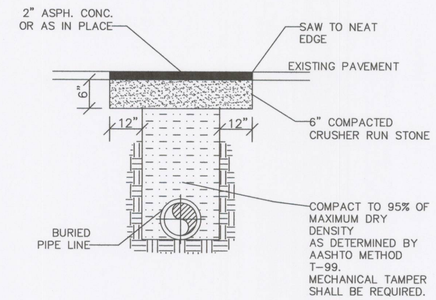

ASPHALT REPAIR

NOT TO SCALE

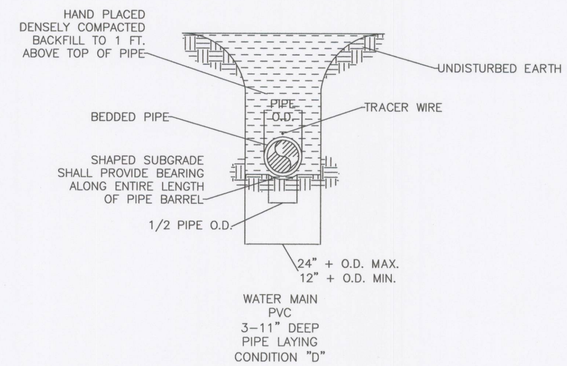

PIPE LAYING STANDARDS

NOT TO SCALE

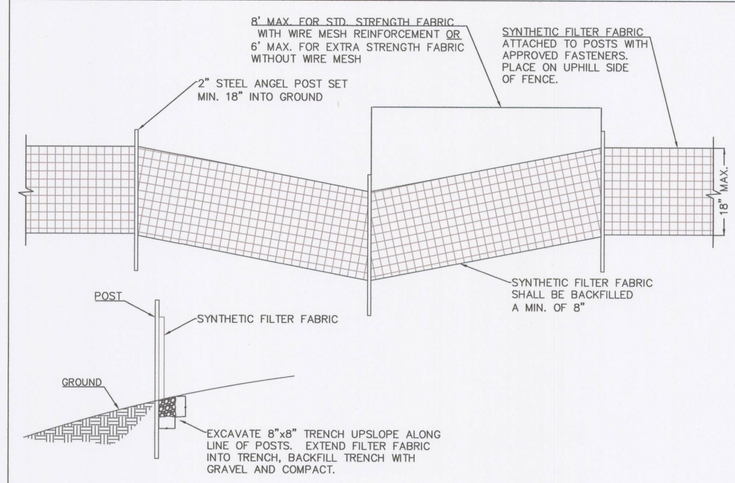

NOTES:
A) FILTER BARRIERS SHALL BE INSPECTED IMMEDIATELY AFTER EACH RAINFALL AND REPAIR SHALL BE MADE AS NECESSARY.

B) FABRIC SHALL BE REPLACED PROMPTLY IF FOUND TO BE IN DISREPAIR.

C) SEDIMENT DEPOSITS SHALL BE REMOVED AFTER EACH STORM EVENT AND WHEN DEPOSITS REACH APPROXIMATELY ½ HEIGHT OF BARRIER.

TEMPORARY SILT FENCE DETAIL

NOT TO SCALE

MOORE COUNTY PUBLIC WORKS
www.moorecountync.gov
5227 HWY 15-501
P.O. BOX 1927
CARTHAGE, NC 28327
(910) 947-6315

SEABOARD STREET
WATER LINE REPLACEMENT
VASS, NC

DATE: JUNE 2015
DESIGNED BY: MHS
CADD BY: LSD

CONSTRUCTION DETAILS

REVISIONS

NO.	DATE	BY	DESCRIPTION

SHEET
C7

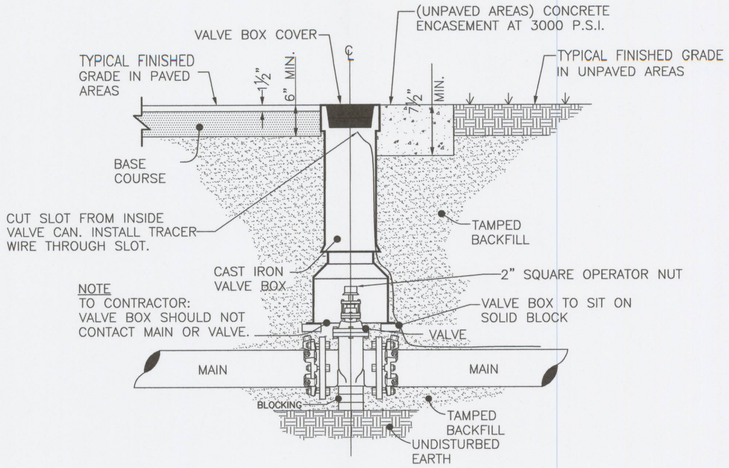

NOTES:
1. ONLY MANUFACTURED VALVE BOX EXTENSIONS SHALL BE ALLOWED.
2. VALVE OPERATING NUT MUST BE EXTENDED SO THAT THE DEPTH IS NO GREATER THAN 8' (ft.) FROM THE SURFACE USING A MANUFACTURER APPROVED EXTENSION KIT.
3. PRECAST CONCRETE ENCASEMENT IS ALLOWED OUTSIDE OF PAVED AREAS.
4. CONCRETE PROTECTOR RING MAY BE USED IN LIEU OF ENCASEMENT IN UNPAVED AREAS.
5. ALL GATE VALVES SHALL BE PLACED ON 4" THICK 8"X12" CONCRETE BLOCKS.

VALVE AND VALVE BOX INSTALLATION

NOT TO SCALE

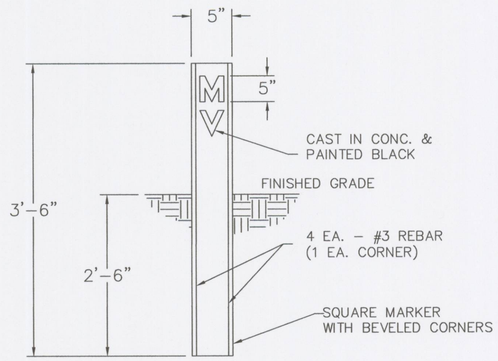

NOTES:
1. VALVE MARKERS SHALL BE PLACED AT R/W.
2. LETTERS "MV" SHALL FACE TOWARDS VALVE.
3. MARKER SHALL HAVE BRASS OR BRONZE EMBED ON TOP OR SIDE.
4. CONTRACTOR SHALL STAMP DISTANCE TO CENTER OF VALVE INTO EMBED.
5. BLOW-OFF ASSEMBLY SHALL INCLUDE 1 EA. MARKER W/ "BO" OR "MV" CAST.

VALVE MARKER

NOT TO SCALE

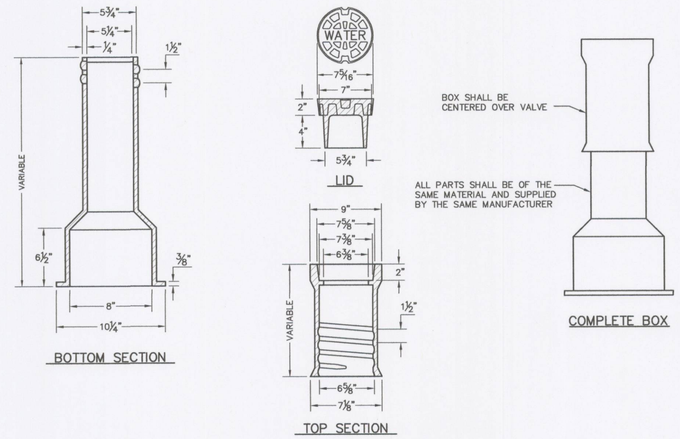

VALVE BOX

NOT TO SCALE

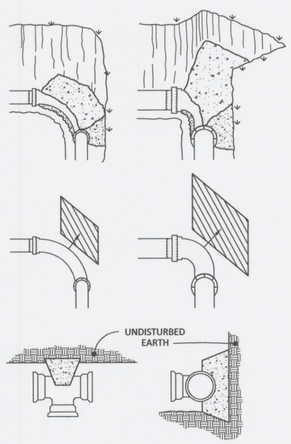

MINIMUM CONCRETE BLOCKING (C.Y.) *					
NOMINAL PIPE DIAMETER INCHES	TEES & DEAD ENDS	90° BEND	45° BEND	22½° BEND	11¼° BEND
4	0.1	0.1	0.1	0.1	0.1
6	0.2	0.2	0.1	0.1	0.1
8	0.2	0.3	0.2	0.1	0.1
10	0.3	0.5	0.3	0.2	0.2
12	0.4	0.6	0.5	0.3	0.3
14	0.7	0.9	0.6	0.5	0.5
16	0.7	0.9	0.6	0.5	0.5
18	0.9	1.2	0.7	0.6	0.6
20	1.1	1.6	1.1	0.7	0.7
24	1.7	2.3	1.6	0.9	0.9

NOTES:

1.) CONCRETE SHALL BE 3,000 PSI MIN.
2.) ALL FITTINGS AND ACCESSORIES SHALL BE WRAPPED WITH 6 MIL POLYETHYLENE PRIOR TO POURING CONCRETE.
3.) NO CONCRETE SHALL COVER ANY BOLTS OR GLANDS.

THRUST BLOCKING

NOT TO SCALE

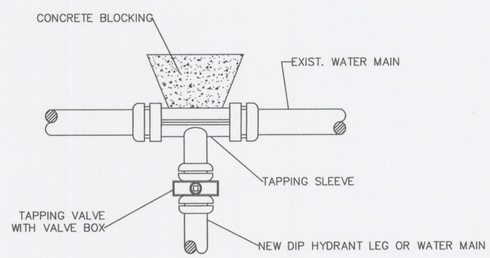

NOTES:
1. TAPPING SLEEVE SHALL BE FABRICATED OF TYPE 304 S.S. AND PROVIDE A 360° SEAL AROUND EXISTING PIPE WITH FULL CIRCUMFERENTIAL GASKET.

TAPPING SLEEVE & VALVE ASSEMBLY

NOT TO SCALE

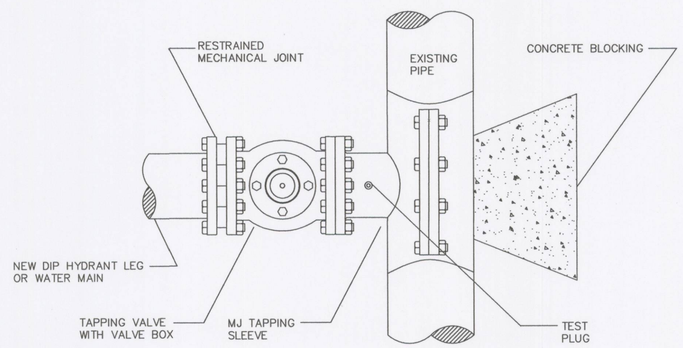

PLAN

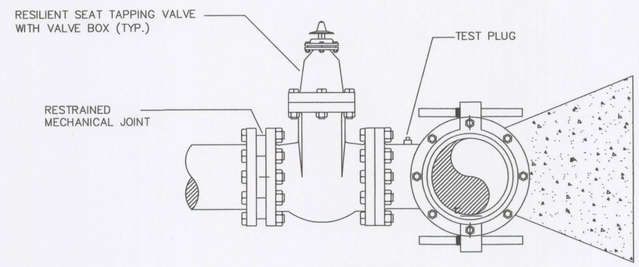

PROFILE

NOTES:
1. TAPPING SLEEVE SHALL BE FABRICATED OF TYPE 304 S.S. AND PROVIDE A 360° SEAL AROUND EXISTING PIPE WITH FULL CIRCUMFERENTIAL GASKET.

MOORE COUNTY PUBLIC WORKS
www.moorecountync.gov
5227 HWY 15-501
P.O. BOX 1927
CARTHAGE, NC 28327
(910) 947-6315

6/3/16

SEABOARD STREET
WATER LINE REPLACEMENT
VASS, NC

DATE: JUNE 2015
DESIGNED BY: MHS
CADD BY: LSD

CONSTRUCTION DETAILS

REVISIONS			
NO.	DATE	BY	DESCRIPTION

SHEET
C8

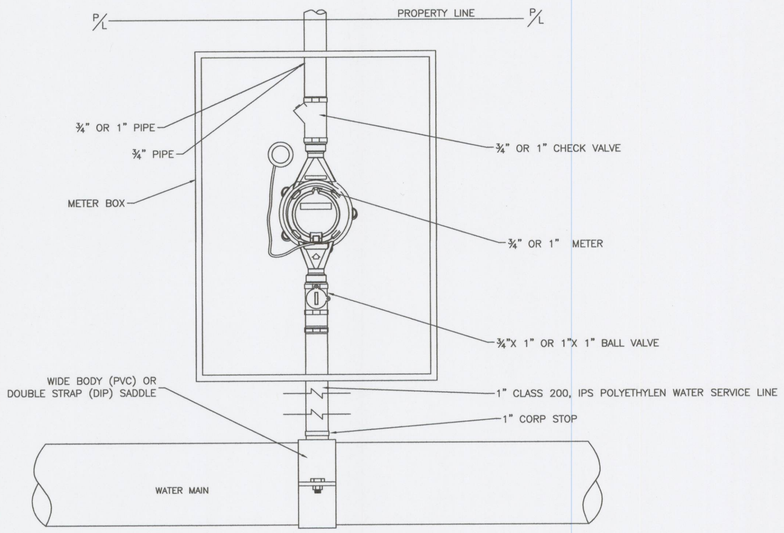

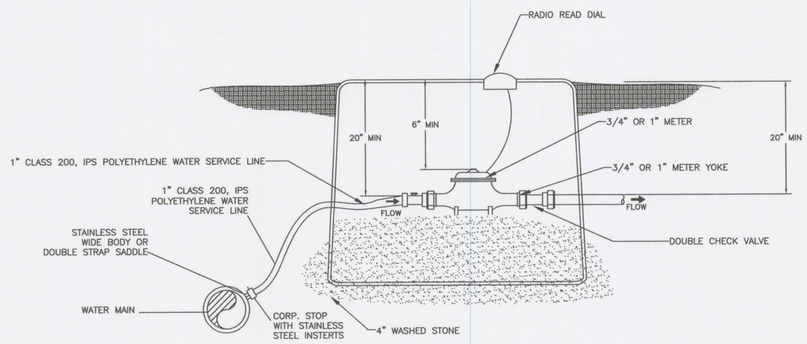

NOTES:

1. METER TO BE PLACED IN NONE TRAFFIC AREA.
2. PLASTIC METER BOX TO BE 21-3/8"X14-7/8"X12"H MINIMUM, WITH LID TO BE LABELED "WATER METER", CONTAINING A CAST IRON LID AND RADIO READER HOLE.
3. CHECK VALVE TO BE ¾" FORD HHS 31-323 OR 1" FORD HHS 31-344 OR EQUAL.
4. METER TO BE ¾", BADGER (M-35) OR 1", BADGER (M-70) OR EQUAL.
5. VALVE TO BE 1" BALL VALVE BY ¾" METER NUT, FORD (B63-342) OR 1" BALL VALVE BY 1" METER NUT, FORD (B63-344) OR EQUAL.
6. CORP STOP TO BE 1", FORD 1001-4, OR EQUAL.
7. PLUMBER TO INSTALL ¾" OR 1" PIPE FROM CHECK VALVE.
8. MCPW TO INSTALL ¾" OR 1" CHECK VALVE AND ¾" OR 1" METER.
9. MCPW OR CONTRACTOR, AT NEW INSTALLATIONS, TO INSTALL BALL VALVE WITH METER NUT, 1" PIPE, 1" CORP STOP AND SADDLE.
10. STAINLESS STEEL INSERTS AT CORP STOP & BEND.
11. METER BOX SHALL HAVE AT LEAST A 3' ALLOWANCE FROM ANY OBSTRUCTIONS.

3/4" OR 1" WATER SERVICE

NOT TO SCALE

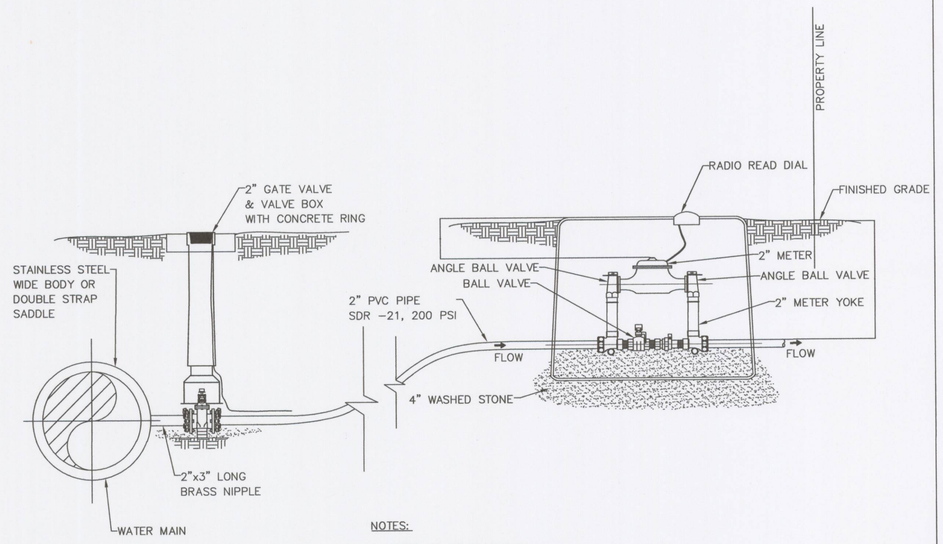

NOTES:

1. METER TO BE PLACED IN A NON-TRAFFIC AREA.
2. PLASTIC METER BOX TO BE 40-3/4" x 27-1/2" x15" H WITH LID TO BE LABELED "WATER METER", CONTAINING A CAST IRON LID AND RADIO READ HOLE.
3. BACKFLOW PREVENTOR REQUIRED ON CUSTOMER SIDE OF METER.
4. METER BOX SHALL HAVE AT LEAST 3' ALLOWANCE FROM ANY OBSTRUCTIONS.

2" WATER SERVICE

NOT TO SCALE

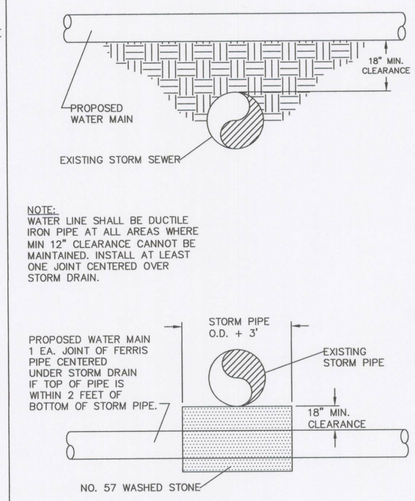

NOTE:
WATER LINE SHALL BE DUCTILE IRON PIPE AT ALL AREAS WHERE MIN 12" CLEARANCE CANNOT BE MAINTAINED. INSTALL AT LEAST ONE JOINT CENTERED OVER STORM DRAIN.

STORM CROSSING DETAIL

NOT TO SCALE

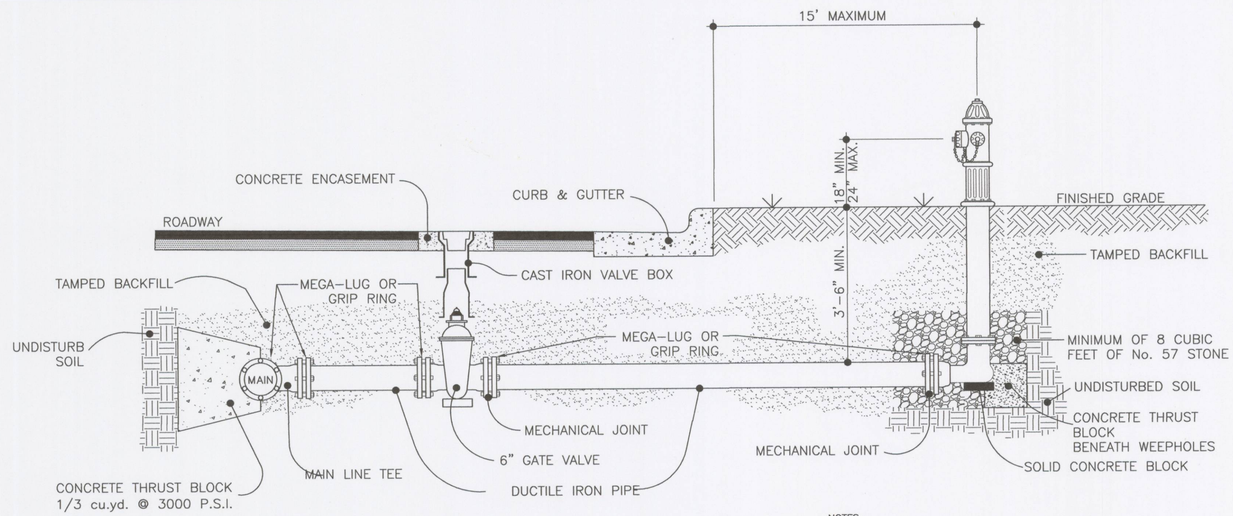

NOTES:

1. TOP OF BLOCKING TO BE 2" FROM HYDRANT WEEP HOLES
2. PAINT HYDRANT ONE COAT AFTER INSTALLATION. PAINT BARREL RED, CAPS AND BONNET WHITE.
3. HYDRANT SHALL BE:
   - CLOW MEDALLION
   - MUELLER SUPER CENTURION
   - KENNEDY K-810 OR EQUAL
4. 4 ½" HYDRANT BARRELS REQUIRED ON ALL MAINS 6" TO 10".
5. 5¼" HYDRANT BARRELS REQUIRED ON ALL 12" MAINS AND LARGER.

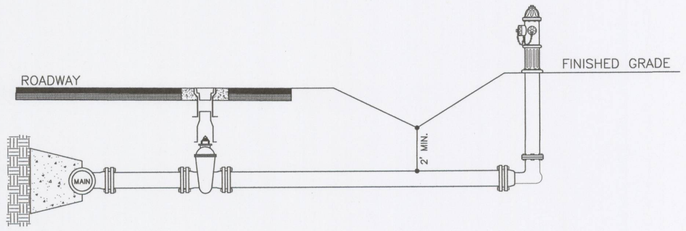

ROADWAY WITHOUT CURB AND GUTTER

FIRE HYDRANT ASSEMBLY

NOT TO SCALE

MOORE COUNTY PUBLIC WORKS
www.moorecountync.gov
5227 HWY 15-501
P.O. BOX 1927
CARTHAGE, NC 28327
(910) 947-6315

SEAL 030862 NORTH CAROLINA PROFESSIONAL ENGINEER

SEABOARD STREET
WATER LINE REPLACEMENT
VASS, NC

DATE: JUNE 2015
DESIGNED BY: MHS
CADD BY: LSD

CONSTRUCTION DETAILS

REVISIONS			
NO.	DATE	BY	DESCRIPTION

SHEET
C9