COUNTY OF MOORE
NORTH CAROLINA

INFORMAL BID

ISSUE DATE: January 19, 2016 **INFORMAL BID 2016-03**

TITLE: **Flow Monitoring Station / Taylortown – Lincoln Avenue**

ISSUING DEPARTMENT: **COUNTY OF MOORE**
Financial Services
206 S. Ray Street
PO Box 905
Carthage, NC, 28327

Sealed Bids will be received until **4:00 PM Tuesday February 2, 2016** from qualified firms for the Flow Monitoring Station / Taylortown – Lincoln Avenue Project. All inquiries for information concerning the Bid shall be directed to:

Terra Vuncannon, Purchasing Coordinator
PO Box 905
Carthage, NC 28327
(910) 947-7118
tvuncannon@moorecountync.gov

Sealed Bids shall be provided to Terra Vuncannon; it is the sole responsibility of the vendor to ensure that its bid reaches the Financial Services by the designated date and hour indicated above.

Firm Name: _____

Address: _____

_____

_____

By: _____
(Printed)

By: _____
(Signature)

TABLE OF CONTENTS

INSTRUCTIONS TO BIDDERS	Page 2
BID FORM	Page 5
NON-COLLUSION AFFIDAVIT	Page 6
VENDOR APPLICATION	Page 7
REFERENCES, EQUIPMEMT AND RESUMES	Page 9
W-9 FORM	Page 10
MANUAL 5–WASTEWATER PUMPING STATIONS AND FORCE MAINS	Pages 1-34
SPECIFICATIONS	
SECTION 11396 – MAGNETIC FLOW METERS	Pages 1 – 3
SECTION 13120A – FIBERGLASS METERING MANHOLE	Pages 1 – 3
DETAILED DRAWINGS	Sheets 1–4, E-1

INSTRUCTIONS TO BIDDERS

1. **Bid shall be submitted to the Issuing Department and include the enclosed Bid Form.** In order for a bid to be considered, it shall be based on the terms, conditions and specifications contained herein and shall be a complete response to this Informal Bid. The County reserves the right to make an award in whole, or in part, and to reject any and/or all bids, and to waive any informality in proposals unless otherwise specified by the Proposer. The Proposer shall sign the bid correctly and bids may be rejected if they show omissions, alterations of form, additions not called for, conditional proposals or any irregularities of any kind.

2. All labor costs, direct and indirect, shall have been determined and included in the proposal. The cost and availability of all equipment, materials, and supplies associated with performing the services described herein shall have been determined and included in the proposal. Do not include sales tax in proposal figures. The County pays sales tax and will add this to your proposal figures separately when invoices are paid. All price quotes shall include delivery to the delivery point, installation and set-up charges, as necessary. Goods shall be set in place ready for owner's use. All goods shall be new and of average quality. No remanufactured, refurbished or used goods will be accepted. Appropriate product information (e.g. brochures, catalog cuts, etc.) shall be included with the proposal.

3. After the Informal Bid issue date, all communications between the Issuing Department and prospective Proposers shall be in writing. No oral questions shall be accepted. Any inquiries, requests for interpretation, technical questions, clarifications, or additional information shall be directed to Terra Vuncannon at the address listed on page one if this solicitation or via e-mail to tvuncannon@moorecountync.gov. All questions concerning this Informal Bid shall reference the section and page number. Questions and responses affecting the scope of the goods will be provided to all prospective Proposers by issuance of an Addendum. **All written questions shall be received by the Issuing Department no later than 10:00 am Tuesday January 26, 2016. NO EXCEPTIONS. All addendums pertaining to this Informal Bid will be posted to the County website at www.moorecountync.gov within 24 – 48 business hours after the deadline for questions. It is the bidder's responsibility to check the website for the addendums.**

4. The County will not be responsible for any oral instructions. Should a Proposer find discrepancies in, or omissions from the documents, or should be in doubt as to their meaning, s/he should at once notify the Issuing Department in writing, and a written addendum shall be issued. Acknowledgement of any Addendum received during the time of the proposal shall be noted on the Bid Form in the spaces provided. In closing of a contract, any Addendum issued shall become a part thereof. **It is the Proposer's responsibility to assure that all addenda have been reviewed and, if need be, signed and returned.**

5. Proposals will be examined promptly after opening and award will be made at the earliest possible date. The prices quoted must be held firm, and no proposals may be withdrawn

until **90 days** after proposal opening date. The County reserves the right to conduct any test/inspection it may deem advisable to ensure services/materials/supplies/equipment, as appropriate, conform to specifications.

6. Pursuant to North Carolina General Statutes Section 143-131, "award shall be made to the lowest responsible, responsive bid or bidders, taking into consideration quality, performance and the time specified in the proposals for the performance of the contract."

7. The materials/supplies/equipment furnished under any resulting contract shall be covered by the manufacturer's most favorable commercial warranty. Each Proposer shall plainly set forth the warranty for the goods in the proposal. Operations and maintenance manuals for equipment shall also be provided, as appropriate.

8. All purchases for goods or services are subject to the availability of funds for this particular purpose.

9. The contractor shall not represent itself to be an agent of the County.

10. The General Statutes of the State of North Carolina, insofar as they apply to purchasing and competitive bidding, are made a part hereof.

11. The County of Moore is committed to creating and maintaining an environment free from harassment and other forms of misconduct that fundamentally compromise the working environment of the County. All contractors performing work/services at a County facility shall take all necessary steps to assure that none of its employees engage in harassment or intimidation relating to personal beliefs or characteristics of anyone on the County's premises, including but not limited to, race, religion, age, color, sex, national origin or disability. Such harassment is unacceptable and will not be condoned in any form at the County of Moore. If such conduct occurs, the contractor will take all necessary steps to stop it and prevent its future occurrence. This policy shall be strictly enforced.

12. For all the work being performed under this Contract, the County of Moore has the right to inspect, examine, and make copies of any and all books, accounts, records and other writing relating to the performance of the work. Audits shall take place at times and locations mutually agreed upon by both parties, although the vendor/contractor must make the materials to be audited available within one (1) week of the request for them.

13. All Proposers must complete and submit the Vendor Form with their proposal package. This information will be used to create or update the County's vendor file.

14. Proposers are cautioned that this is an informal bid, not a request for contract, and the County of Moore reserves the right to reject any and/or all proposals. It further reserves the right to waive informalities insofar as it is authorized so to do where it deems it advisable in protection of the best interests of the County.

15. Proposals will be tabulated, evaluated and a recommendation presented to the County of

Moore Board of Commissioners for their approval.

16. Any and all exceptions to the Specifications must be stated in writing, giving complete details of what is to be furnished in lieu of requested Specifications.

17. The County of Moore reserves the right to cancel and terminate any resulting contract, in whole or in part, without penalty, upon forty-five (45) days' notice to the Vendor(s). Any contract cancellation shall not relieve the Vendor(s) of the obligation to deliver any outstanding services issued prior to the effective date of the cancellation.

18. **Proposals in one (1) original and three (3) copies will be received from each Proposer in a sealed envelope or package**. Each original shall be signed and dated by an official authorized to bind the form. Unsigned proposals will not be considered.

19. Upon receipt by Moore County Financial Services, your Proposal is considered a public record except for material which qualifies as "trade secret" information under N.C. Gen. Stat. 66-152 et. seq. After the Proposal opening, your Proposal may be reviewed by the County's evaluation committee, as well as other County staff and members of the general public who submit public records requests. To properly designate material as trade secret under these circumstances, each Proposer must take the following precautions: (a) any trade secrets submitted by a Proposer must be submitted in a separate, sealed envelope marked "Trade Secret — Confidential and Proprietary Information — Do Not Disclose Except for the Purpose of Evaluating this Proposal," and (b) the same trade secret/confidentiality designation must be stamped on each page of the trade secret materials contained in the envelope.

    In submitting a Proposal, each Proposer agrees that the County may reveal any trade secret materials contained in such response to all County staff and County officials involved in the selection process, and to any outside consultant or other third parties who serve on the evaluation committee or who are hired by the County to assist in the selection process. Furthermore, each Proposer agrees to indemnify and hold harmless the County and each of its officers, employees, and agents from all costs, damages, and expenses incurred in connection with refusing to disclose any material which the Proposer has designated as a trade secret. Any Proposer that designates its entire Proposal as a trade secret may be disqualified.

    21. Proposer shall comply with the North Carolina Workers' Compensation Act and shall provide for the payment of workers' compensation to its employees in the manner and to the extent required by such Act. In addition, the Provider shall maintain, at its expense, the following minimum insurance coverage:

General Liability -	$2,000,000
Auto Liability -	$2,000,000
Umbrella Coverage -	$5,000,000

    Contractor must have active North Carolina Public Utilities Contractors License or a PU (Water Lines and Sewer Lines) Specialty License.

FLOW MONITORING STATION / TAYLORTOWN – LINCOLN AVENUE PROJECT
MOORE COUNTY PUBLIC WORKS DEPARTMENT

BID FORM

This Bid consist of equipment, labor, materials, and traffic control for the Flow Monitoring Station / Taylortown – Lincoln Avenue Project. Use this form for submitting Bids. No alterations, changes in Bid format will be allowed. All items related to providing a complete project should be included in the Lump Sum Amount specified. The County of Moore shall reserve the right to reject any or all Bids. Opening will not be public.

The Contractor agrees to commence and complete the Flow Monitoring Station / Taylortown - Lincoln Avenue project for Moore County Public Works Department and furnish all of the materials, tools, labor, supplies, equipment, incidentals and services as necessary for the construction of a complete project in accordance with the detailed drawings and contract documents. The Contractor will commence and complete the work within 120 days for the following Lump Sum Amount:

TOTAL PROJECT COST – LUMP SUM AMOUNT $_____

Responsive Bid must include the following documents:

1. **Signed Bid Form**
2. **Notarized Non-Collusion Affidavit**
3. **Current W-9 Form**
4. **Vendor Application (including references, equipment and resumes)**
5. **Copy of Contractor License**
6. **Proof of Insurance**

On behalf of _____ (Bidder), I am submitting a bid for the Flow Monitoring Station / Taylortown – Lincoln Avenue Project. This Bid covers equipment, labor, materials, traffic control and all other incidentals to complete the project. I certify that the contents of this Bid are known to no one outside the undersigned, and to the best of my knowledge all requirements have been complied with.

By: _____ (Printed)

By: _____ (Signature)

Date: _____

Receipt of the following addendum is acknowledged:

Addendum No._____ Received: (circle) YES / NO Date: _____

Addendum No._____ Received: (circle) YES / NO Date: _____

NON-COLLUSION AFFIDAVIT

State of North Carolina
County of Moore

I _____, being first duly sworn, deposes and says that:

He/She is the _____of _____, the proposer that has submitted the attached proposal;

He/She is fully informed respecting the preparation and contents of the attached proposal and of all pertinent circumstances respecting such proposal;

Such proposal is genuine and is not a collusive or sham proposal;

Neither the said Proposer nor any of its officers, partners, owners, agents, representatives, Employees or parties of interest, including this affiant, has in any way colluded, conspired, connived or agreed, directly or indirectly, with any other Proposer, firm or person to submit a collusive or sham proposal in connections with the contract for which the attached proposal has been submitted or to refrain from bidding in connection with such contract, or has in any manner, directly or indirectly, sought by agreement or collusion or communication or conference with any other Proposer, firm or person to fix the price or prices in the attached proposal or of any other Proposer or to fix overhead, profit or cost element of the proposal price of any other Proposer or to secure through collusion, conspiracy, connivance or unlawful agreement any advantage against the County of Moore or any person interested in the proposed contract; and

The price or prices quoted in the attached bid are fair, proper and are not tainted by any collusion, conspiracy, connivance or unlawful agreement on the part of the Proposer or any of its agents, representatives, owners, employees, or parties in interest, including this affiant.

_____
Signature and Title

State of North Carolina
County of _____
Subscribed and sworn before me,
This _____day of _____, 2016
_____
Notary Public
My commission expires _____

Vendor Application

County of Moore
Financial Services – Purchasing Division
PO Box 905
Carthage, NC 28327
Phone: (910) 947 - 7118
Fax: (910) 947 - 6311

Please Type or Print Legibly

Federal ID # _____ SS # _____

Vendor Name	Date

Vendor # _____

ORDER ADDRESS	PAY ADDRESS
Street	Street
Street	Post Office Box
City	City
State Zip Code	State Zip Code

CONTACT PERSON	TELEPHONE NUMBER	FAX NUMBER

YEAR ESTABLISHED	TERMS	DISCOUNT

CONTRACTOR'S LICENSE # (if applicable)	SIGNATURE EMAIL ADDRESS:

This firm certifies that it is a: (if applicable)

☐ Disabled ☐ Minority Business Enterprise ☐ Women Business Enterprise

To qualify for MWBE status, 51% of the company must be owned and controlled by minority groups or women. For the purpose of this definition, minority group members are Black Americans, Hispanic Americans, American Indians and/or American Women. To qualify for Disabled status, 51% of the company must be owned and controlled by disabled persons.

Product(s) and/or Service(s)

Please list the type product(s) and/or Service(s) that your company can provide.

_____ _____ _____

_____ _____ _____

FLOW MONITORING STATION / TAYLORTOWN – LINCOLN AVENUE
MOORE COUNTY PUBLIC WORKS DEPARTMENT

REFERENCES, EQUIPMENT AND RESUMES

Please list references, available equipment and resumes

Form **W-9**
(Rev. December 2014)
Department of the Treasury
Internal Revenue Service

Request for Taxpayer Identification Number and Certification

Give Form to the requester. Do not send to the IRS.

Print or type
See Specific Instructions on page 2.

1 Name (as shown on your income tax return). Name is required on this line; do not leave this line blank.

2 Business name/disregarded entity name, if different from above

3 Check appropriate box for federal tax classification; check only one of the following seven boxes:
☐ Individual/sole proprietor or single-member LLC ☐ C Corporation ☐ S Corporation ☐ Partnership ☐ Trust/estate
☐ Limited liability company. Enter the tax classification (C=C corporation, S=S corporation, P=partnership) ▶
Note. For a single-member LLC that is disregarded, do not check LLC; check the appropriate box in the line above for the tax classification of the single-member owner.
☐ Other (see instructions) ▶

4 Exemptions (codes apply only to certain entities, not individuals; see instructions on page 3):
Exempt payee code (if any)
Exemption from FATCA reporting code (if any)
(Applies to accounts maintained outside the U.S.)

5 Address (number, street, and apt. or suite no.)

Requester's name and address (optional)

6 City, state, and ZIP code

7 List account number(s) here (optional)

Part I Taxpayer Identification Number (TIN)

Enter your TIN in the appropriate box. The TIN provided must match the name given on line 1 to avoid backup withholding. For individuals, this is generally your social security number (SSN). However, for a resident alien, sole proprietor, or disregarded entity, see the Part I instructions on page 3. For other entities, it is your employer identification number (EIN). If you do not have a number, see *How to get a TIN* on page 3.

Note. If the account is in more than one name, see the instructions for line 1 and the chart on page 4 for guidelines on whose number to enter.

Social security number
☐☐☐ – ☐☐ – ☐☐☐☐

or

Employer identification number
☐☐ – ☐☐☐☐☐☐☐

Part II Certification

Under penalties of perjury, I certify that:

1. The number shown on this form is my correct taxpayer identification number (or I am waiting for a number to be issued to me); and
2. I am not subject to backup withholding because: (a) I am exempt from backup withholding, or (b) I have not been notified by the Internal Revenue Service (IRS) that I am subject to backup withholding as a result of a failure to report all interest or dividends, or (c) the IRS has notified me that I am no longer subject to backup withholding; and
3. I am a U.S. citizen or other U.S. person (defined below); and
4. The FATCA code(s) entered on this form (if any) indicating that I am exempt from FATCA reporting is correct.

Certification instructions. You must cross out item 2 above if you have been notified by the IRS that you are currently subject to backup withholding because you have failed to report all interest and dividends on your tax return. For real estate transactions, item 2 does not apply. For mortgage interest paid, acquisition or abandonment of secured property, cancellation of debt, contributions to an individual retirement arrangement (IRA), and generally, payments other than interest and dividends, you are not required to sign the certification, but you must provide your correct TIN. See the instructions on page 3.

Sign Here **Signature of U.S. person ▶** **Date ▶**

General Instructions

Section references are to the Internal Revenue Code unless otherwise noted.

Future developments. Information about developments affecting Form W-9 (such as legislation enacted after we release it) is at *www.irs.gov/fw9*.

Purpose of Form

An individual or entity (Form W-9 requester) who is required to file an information return with the IRS must obtain your correct taxpayer identification number (TIN) which may be your social security number (SSN), individual taxpayer identification number (ITIN), adoption taxpayer identification number (ATIN), or employer identification number (EIN), to report on an information return the amount paid to you, or other amount reportable on an information return. Examples of information returns include, but are not limited to, the following:

- Form 1099-INT (interest earned or paid)
- Form 1099-DIV (dividends, including those from stocks or mutual funds)
- Form 1099-MISC (various types of income, prizes, awards, or gross proceeds)
- Form 1099-B (stock or mutual fund sales and certain other transactions by brokers)
- Form 1099-S (proceeds from real estate transactions)
- Form 1099-K (merchant card and third party network transactions)
- Form 1098 (home mortgage interest), 1098-E (student loan interest), 1098-T (tuition)
- Form 1099-C (canceled debt)
- Form 1099-A (acquisition or abandonment of secured property)

Use Form W-9 only if you are a U.S. person (including a resident alien), to provide your correct TIN.

If you do not return Form W-9 to the requester with a TIN, you might be subject to backup withholding. See What is backup withholding? on page 2.

By signing the filled-out form, you:

1. Certify that the TIN you are giving is correct (or you are waiting for a number to be issued),
2. Certify that you are not subject to backup withholding, or
3. Claim exemption from backup withholding if you are a U.S. exempt payee. If applicable, you are also certifying that as a U.S. person, your allocable share of any partnership income from a U.S. trade or business is not subject to the withholding tax on foreign partners' share of effectively connected income, and
4. Certify that FATCA code(s) entered on this form (if any) indicating that you are exempt from the FATCA reporting, is correct. See *What is FATCA reporting?* on page 2 for further information.

Cat. No. 10231X Form **W-9** (Rev. 12-2014)

Manual 5

MANUAL 5 - WASTEWATER PUMPING STATIONS & FORCE MAINS

5.01 Pre Design Requirements

In situations where gravity flow to an existing sewer is not feasible, MCPW will consider the installation of a wastewater pumping station and a force main. Certain factors must be addressed by the developer for the project for consideration by MCPW. The factors include:

1. Determine the wastewater flow that would be generated by the total built-out of the natural drainage basin based upon the existing zoning. Pumps shall be sized for a minimum of 20 years or as approved by the County Engineer.

2. Evaluate the capacity of the receiving sewer main at the point of discharge and downstream facilities to determine that sufficient capacity is available for the transferred sewer flow.

5.02 Pump & Site Design, General

A. Pump Station

1. Pump stations shall be designed to contain raw wastewater.

2. Pump station structures shall be designed to withstand the hydrostatic forces that they will be subjected to, including uplift.

3. Pump stations shall be of the Enclosed Above Grade Self-Priming Package-Type or Submergible type as approved by the Engineer.

4. All stations shall have a minimum of two (2) pumps of equal capacity, with each pump sized to handle design flow, and shall be capable of handling flows in excess of the expected peak flow. Where three or more pumps are required, they shall be of such capacity that with any one unit out of service, the remaining units will have capacity to handle peak sewage flows, per NCDENR minimum guidelines. Where pumping stations may be designed to handle larger future flows, the wet well, piping, electrical equipment, etc. shall be sized to accommodate the future flow.

5. Where a pumping station is sized to accommodate growth and will operate at less than 25% of its capacity, chemical feed facilities shall be provided for odor and corrosion control. These facilities shall include all feed equipment and storage

facilities, including secondary containment and shall be approved in advance by the Engineer.

6. A receiving manhole, separate from the wet well, shall be provided within 20 feet of the Wet-Well. This receiving manhole shall have a rim elevation one foot minimum below the Wet-Well rim and two feet above the 100 year flood elevation. Where multiple sewers converge at a pumping station, they shall be brought together at the receiving manhole and only one influent line shall enter the wet well. This manhole shall be situated to facilitate future upstream extensions of the gravity sewer.

7. Pumping station piping shall be sized to maintain flow velocities between 2.5 and 5.0 fps. The minimum size force main shall be 4" diameter.

8. Wastewater pumping stations, access drains, structures, electrical equipment, etc. shall be protected from physical damage by sitting no less than 3 feet above the predicted 100 year flood water elevation. Stations shall remain fully operational and accessible during the 100-year flood. The predicted 100-year flood elevation shall be shown on all site plans. The final station elevation shall be indicated on the record drawings. The 100-year flood elevation shall be converted to the same datum used for the station design.

9. Wet well and Electrical Service shall be designed for built-out conditions.

B. Site Work

1. The site work shall be generally level graded to remove runoff from site in a non-erosive manner. Drainage swales shall be provided to direct drainage away from the site.

2. The site shall be stabilized inside the fence and one foot around the outside perimeter with ABC stone 6" thick. A landscaped buffer shall be constructed outside of the fence to screen the station from adjoining properties. The proposed landscaping shall be shown on the approved plans. All proposed landscaping shall be of species suited to the climate region and require minimal maintenance. (2" tree trunk, 3 gallon shrub etc,)

3. An all-weather access road constructed of 6" minimum of compacted aggregate base course and located within a 25-foot minimum access easement shall be provided to the pumping station site. The road shall be a minimum of 15 feet minimum in width, with shoulders, side ditches and cross drainage as needed. A turn around area large enough for a fuel oil truck (NCDOT-SU design vehicle) shall be provided outside of the pump station fence. The maximum roadway grade shall be 8 percent for stone base roadways. Steeper roads shall be paved. Pavement shall be Concrete or Asphalt. The roadway shall be (1) foot above the 100 year base flood elevation.

4. Suction and discharge piping shall be ductile iron pipe designed and manufactured per ANSI/AWWA C150/A21.15-05. The pipe shall have protective interior coating a minimum of 40 mil equivalent to "Protecto 401" by American Cast Iron Pipe.

C. Emergency Pump Connection

Pump Stations shall be equipped with an Emergency Pump Connection fastened to the outlet line from the Valve Vault. The connection shall have a plug valve, an emergency pump connection approximately 2 feet above the ground and with a 90 degree flanged connection parallel to the ground's surface. A Baver quick connect and blind flange with stainless steel bolts shall be provided. All pipe shall be DIP and there shall be a 4 inch concrete pad surrounding the connection and plug valve. (See STD. No. PS 1)

D. Yard Hydrant

Each pumping station shall have a potable water supply service line consisting of a 1" service line with an Engineer approved RPZ-type backflow preventer and terminating at the pump station site with a freeze-proof yard hydrant. An insulated and heated enclosure shall be provided to protect the RPZ from freezing. (See STD. No. PS 2) The Yard Hydrant to be Simmons Sanitary Yard Hydrant, 802LF 54" or equal.

E. Fencing

All pumping station sites shall be fenced for security. Pumping stations located in remote areas shall have a chain link fence as described below. (See STD No. PS 3) Stations that are adjacent (visible) to residential and commercial areas shall have a wooden shadow box style fence.

(1) Wooden Fencing

Where a wooden fence is provided around the pumping station site, the fence shall have the following features:

Height:	6-½’ to top of pickets
Gates:	1 – 12’ double-leaf vehicle gate
	1 – 4’ single-leaf personnel gate

The fence shall be of the shadow box style (80% opaque), with vertical pickets (alternating inside and out), constructed entirely of pressure treated lumber with galvanized hardware and fasteners.

(a) Vertical Pickets - shall be 5/4" by 6" by 6' nominal dimension treated lumber

(b) Posts - shall be 6" by 6" by 10' nominal dimension treated lumber, with the tops beveled at a 45-degree angle each way (pyramid top)

(c) Horizontal Rails - shall be 2" by 4" by 7'-6" nominal dimension treated lumber, three per panel section

Posts shall be set at 8' centers, maximum, at each corner and at each side of each gate. All posts shall be set 36" deep in concrete. Horizontal rails shall be set 12", 42" and 72" above grade. Pickets shall be attached to the horizontal rails with the bottoms 6" above grade and alternating inside and out. All lumber shall be pressure treated Southern Yellow Pine and bear the mark of the American Wood Preservers Association Standard No. C2/C9.

All gates shall be equipped with lockable latches and tamper proof hinges. For vehicle gates, keepers shall be provided to hold gates in the open position.

(2) Chain Link Fencing

Where a chain link fence is provided around the pumping station site, the fence shall have the following features:

Height:	6’ to center of top rail
Barbed Wire:	3 strands at top
Gates:	1 – 12’ double-leaf vehicle gate 1 – 4’ single-leaf personnel gate

All fencing materials shall be vinyl coated galvanized steel, green or black in color. The fencing materials shall be as follows:

(1) Vinyl Coated Chain Link Fence - woven 2-inch mesh of No. 9 ga. (0.1483 in.) copper bearing steel wire, 72 inches wide, galvanized after fabrication. Minimum tensile strength of wire shall be 90,000 psi. The top edge shall be barbed.

(2) Steel Line Posts - line posts shall be 2½" OD vinyl coated galvanized steel pipe weighing 3.65 lbs per lineal foot.

(3) Steel Top Rails - the top rails shall be 1-5/8" OD vinyl coated galvanized pipe weighing 2.27 lbs per lineal foot, with expansion couplings of outside sleeve type. Rails shall be continuous for outside sleeve type for full length of fence.

(4) Steel Terminal, End, Corner & Pull Posts - (referred to herein as terminal posts) - 3" OD vinyl coated galvanized steel pipe weighing not less than 5.79 lbs per lineal foot. Posts shall be of sufficient length to permit the bottom 36 inches to be set in concrete.

(5) Bracing for Use Between Terminal, End, Corner, Gate & Pull Posts and First Adjacent Line Posts - 1-5/8" OD vinyl coated galvanized steel pipe weighing not less than 2.27 lbs per lineal foot.

(6) Gate Posts - 4" OD vinyl coated galvanized steel pipe weighing 9.11 lbs per lineal foot.

(7) Tension Bars – 3/16" X ¾" minimal steel, vinyl coated galvanized and one-piece for full height of fabric.

(8) Stretcher Bar Bands - steel, wrought iron, or malleable iron (painted or vinyl coated) to secure stretcher bars to terminal, end, pull, corner and gate posts. Space not over 12-inch on center.

(9) Gate Frames - 2" OD vinyl coated galvanized steel pipe weighing not less than 2.72 per lineal foot. A 12’ double swing gate (two 6’0" leaves) and a 4’ single-swing gate shall be provided.

(10) Gate Hardware:

Hinges - pressed or forged steel or malleable iron to suit gate size, or non-lift-off heavy duty type, offset to permit 180º gate opening.

Latches - provide latching devices, lockable with padlock from either side. Latches for double gates with automatic engaging latch on one leaf and drop rod type latch on the other leaf. Furnish drop rod complete with suitable casting set in concrete to hold gate leaf in place when drop rod is engaged.

Keepers - provide keepers for all gates to automatically engage gate leaf and hold it in open position until manually released.

(11) Anchorage - line posts, gate posts and corner posts shall be set in concrete 36" deep X 12" dia. (minimum). Concrete shall have a minimum compressive strength of 3,000 psi at 28 days.

(12) Combination Post Top Cap & Barbed Wire Supporting Arm - steel, wrought or malleable iron complete with provisions for anchorage to posts and attaching 3 rows of barbed wire. Provide one cap and vertical arm for each post where barbed wire is required.

(13) Barbed Wire - vinyl coated galvanized two (2) strand, 12-½ ga. wire with 14 ga. 4-point barbs spaced 5 in. oc.

(14) Miscellaneous Items & Materials - Line posts shall be spaced at a maximum interval of 10 feet.

Top rails shall be installed with expansion couplings at intervals of not more than 20 feet and shall be attached to the posts with appropriate wrought iron fittings.

Bracing assemblies shall be installed on all terminal posts, gate posts and at both sides of corner posts and pull posts. Diagonal tension members shall not be less than 3/8" diameter, with a tension take-up device, and shall extend from compression member to base of posts. Posts shall be plumb when diagonal rod is under the correct tension.

Gate frames shall be constructed with heavy malleable iron fittings at the joints to produce rigid joints. Bracing shall be installed so as to provide a rigid, non-sagging or twisting gate. Gate fabric shall be the same as fence fabric and attached in a like manner. Frames shall be furnished with three (3) strands of barb wire at the top.

5.03 Engineering/Design Requirements

A. Engineering calculations must be signed, sealed, and dated by a North Carolina Registered Professional Engineer (PE). Such calculations shall include, at a minimum, the following items:

1. Total dynamic head calculations for all applicable pumping stations, at low water level and high water level.

2. System curve/pump curve analysis used to determine pump selection and operational point.

3. If discharge elevation is lower than highpoint, provide calculations for expected hydraulic conditions.

4. Pump station cycle and pump run times, including an evaluation of any depressed sections of the force main to determine if the pump station is capable of completely flushing the force main section being evaluated in a single pumping cycle.

5. Pump station flotation/buoyancy calculations.

6. Provide re-prime calculations for suction lift stations.

7. Minimum velocity within the force main.

8. Maximum detention times within the pump station and force main.

9. Provide Generator size calculations.

B. Downstream Sewer Evaluation demonstrating that the pump station discharge will not overload the receiving sewer line:

1. In situations where the pump station discharges into a gravity sewer, the downstream gravity sewer shall be evaluated based on peak flow from the proposed project as well as peak flows already tributary to the downstream gravity sewer.

2. In situations where the pump station discharges into another pump station, the downstream pump station shall be evaluated to verify its ability to convey peak flow from the proposed project as well as peak flows already tributary to the downstream pump station.

3. In situations where the pump station discharges into a force main, the downstream force main shall be evaluated on peak flows from the proposed project as well as peak flows already tributary to the downstream force main. The ability of each pump station tributary to the downstream force main to pump against additional head created by greater flows through the force main shall also be evaluated. An evaluation of the discharge point of the downstream force main as described above shall also be performed.

5.04 Pump Requirements

A. General requirements

1. Only pumps designed and manufactured for use in conveying raw, unscreened wastewater shall be acceptable.

2. Pump selection shall consider the duty requirements as well as the physical and chemical characteristics of the wastewater being conveyed. Materials used in pump construction shall also be suitable from the physical and chemical characteristics of the wastewater being conveyed. Accepted submersible pump manufactures are Fairbanks Morse, Barns or approved equal. Suction lift pump stations shall be Gorman Rupp or approved equal.

3. Pump stations conveying residential, commercial, institutional, or industrial domestic wastewater shall be provided with pumps that are suitable for continuous duty in conveying raw unscreened wastewater.

4. Pumps shall be capable of handling a three-inch solid and any trash or stringy material that can pass through a four-inch hose unless a mechanical means of solids reduction is installed at the pump station.

   a. Pumps shall be made non-clog either by passing solids, trash, and stringy material through a non-clog or vortex-type impeller or by grinding, chopping, or cutting them prior to passing them through the impeller. Impellers shall have blades that are generally forward rounded or otherwise configured to avoid catching solids, trash, and stringy material.

   b. Acceptable mechanical means of solids reduction shall include mechanical bar screens, trash bucket or other similar devices.

5. Pump suction and discharge openings shall be no less than four inches, in diameter unless the pump is capable of grinding, chopping, or cutting solids, or a mechanical means of reducing the size of a three-inch solid and any trash or stringy material that can pass thorough a four-inch hose is installed at the pump station.

6. The power source, voltage and phasing shall be certified before ordering the pumps.

B. Number and Capacity

1. Multiple pumps shall be used such that the pump station is capable of conveying the peak discharge to its desired outfall location with the largest single pump out of service.

   a. In duplex pump stations; the pumps shall be of the same capacity. If pumps in series are required, each set of pumps in series shall be viewed as a single pumping unit.

   b. Priming pumps, and other auxiliary system for pump functionality, shall be provided in multiple numbers

   c. At least one standby pump and motor shall be provided.

2. Pump capacity shall be based on wastewater flow expected to become tributary to the station for the entire project at build out. For regional stations, capacity shall be based on wastewater flow expected from the entire service area over the life of the pump station.

3. Interim sizing of pumps and associated pump stations shall be allowable, although not for economic purposes. A statement of initial service capacity shall be on the drawings for projects that are approved for an interim condition. Additional wastewater flow shall not be made tributary to the station until a request for permit modification is submitted, approved, and the pump station upgraded and certified.

4. The peak hourly wastewater flow to the station shall be appropriate for the service area as well as the associated wastewater generation patterns and population being served by the pump station. The minimum peak hourly waste water flow to the station shall be calculated using the design daily wastewater flow in conjunction with a peaking factor determined from the following equation:

$$PF = \frac{Q_{phf}}{Q_{ddf}} = \frac{18 + \sqrt{P}}{4 + \sqrt{P}}$$

Where:

PF = peaking factor
Q_{phf} = peak hourly flow (gallons per day)
Q_{ddf} = design daily flow (gallons per day)
P = service population (thousands)

The above equation yields a peaking factor that is intended to cover normal infiltration and inflow for well-maintained and constructed sewer systems. In no case shall the peaking factor be less than 2.5 for any pump station.

5. Peaking factors for stations conveying industrial or process wastewater shall be based on actual operating conditions, but in no case shall the peaking factor be less than 2.5.

6. Pump capacity shall also be based upon the need to maintain a minimum force main velocity of 2.5 fps.

C. Selection Methodology

1. Pump selection shall be based on a hydraulic analysis of the system. The design operating point(s) of the pump(s) shall be determined using a pump curve-system curve analysis for all Total Dynamic Head (TDH) requirements for the lifetime of the station.

2. A system curve plotting TDH versus capacity shall be developed for all operating conditions. TDH for the system shall be calculated by summing the following:

a. Static head requirements for both the suction and discharge sides of the pumps shall be evaluated including intermediate high points in the force main and the discharge elevation.

b. Friction head requirements for the suction and discharge sides of the pumps shall be evaluated. The friction head shall be calculated using the Hazen-Williams formula:

$$h_f = L \times \frac{10.44\ Q^{1.85}}{C^{1.85}\ D^{4.87}}$$

Where:

h_f = friction head for pipe segment (feet)
L = length of pipe segment evaluated (feet)
Q = pumping rate (gallons per min)
C = Hazen-Williams coefficient
D = diameter of pipe segment evaluated (inches)

Conditions shall be evaluated including, multiple pump operation within the subject force main, simultaneous pump station operation for common force main situations and the possibility for gravity flow conditions in fore main segments with extreme negative slopes that may not flow full.

c. Head derived from minor losses of valves and other fittings shall be evaluated.

d. If applicable, the pressure head at the junction of the existing force main shall also be evaluated, considering the effects of simultaneous pump station operation and multiple pump operation in other pump stations.

3. System curves shall be evaluated for present day and conditions that may exist over the expected lifetime of the pump station.

a. The following maximum values shall be allowable for C:

Pipe type	Initial Service	End-of-Service C
DI	125	100
PVC	140	120
HDPE	140	120

b. Friction head and minor losses shall be evaluated for initial condition and the end-of-service condition.

c. The design operating point(s) shall be the intersection of the pump curve and the calculated system curve(s).

4. Pumps shall be selected such that all design-operating points are on the pump curve as supplied by the manufacturer. Pumps shall be selected such that the net positive suction head available ($NPSH_A$) shall be greater than the net positive suction head required ($NPSH_R$) at each of the design operating points.

5. Pumps shall be selected such that the pumps will not cavitate. Freewheeling (i.e., operating at pump run-out) or deadheading (i.e., operating at pump shut-off) of pumps shall not be allowed.

6. Pumps shall be selected so operating efficiency is maximized during all hydraulic conditions over the lifetime of the pump station.

   a. Consider minimizing motor speeds during the pump selection process.

   b. The horsepower rating of each pump motor shall be at least 1.15 service factor but design shall be non-overloading.

   c. The selected pumps and motors shall operate at the most economical efficiency under average daily flow conditions.

D. Cycle and Pump Run Times

1. Constant speed pumps shall be cycled such that the number of starts are minimized and resting times are maximized to avoid overheating and overstressing of the pump motor.

   a. Automatic pump alternation shall be provided.

   b. Pumps shall be designed to operate between two and eight times per hour at design daily flow (DDF).

   c. The following equation shall be used to determine the active storage volume (between pump on and pump off elevations).

$$V = TQ_{ddf} \times 1 - \frac{Qddf}{Q}$$

Where:

V = active volume within the pump station (gallons)
T = allowable cycle time between starts (minutes)
Q_{ddf} = design daily flow to pump station (gallons per minute)
Q = pumping rate of a single pump (gallons per minute)

   d. If less than two cycles per hour will occur at DDF, or if the station is to provide equalization of hydraulic surges, measures to control odor and corrosion shall be employed when detention times cause septic conditions.

2. MCPW may allow using variable speed pumps for main pump stations or stations that discharge into a wastewater treatment facility, only if constant speed pumps are not applicable or practical.

3. Pump run times shall be such that excessive wear of the pumps does not occur.

4. At DDF, adequate time shall be provided to allow a constant speed pump to "ramp up" to full speed before the pumping cycle ends and shall not be less than or greater than those recommended by the pump manufacturer.

5.05 Wet Well Requirements & Design

The effective capacity of the wet well should be such that it can contain the flow capacity of the drainage basin with the required cycles of the pumps. The inflow line is to be designed to prevent Vortex within the wet well. (For typical Section See STD. No. PS 4 and PS5)

A. Valves

1. Valves shall be suitable for use with raw, unscreened wastewater, as well as the normal and maximum operation pressures expected at the pump station.

   a. A full closing shut-off "full port plug style" valve shall be on the discharge piping of each pump and on the suction piping of each drywell pump.

   b. A check valve shall be on the discharge piping of each pump, between the pump and shut-off valve. Check valves shall be equipped with counter weights and/or springs to prevent water hammer and back siphoning.

   c. A valve shall be provided on the suction piping between the pump and the wet well if a potential exist for the wet well water level to rise above the pump suction elevation in wet well, dry well applications.

   d. Air release valves shall be provided in the valve vault prior to the check valve on a submersible station and before the check valve on a suction lift station.. Discharge shall be piped into the wet well.

2. Valve Forces

   a. A check valve and a gate valve shall be provided for the discharge line of each pump. Valves shall be rated for 200 psi working pressure, and shall have full port openings equal to 100% of the adjacent pipe area. Check valves and shut-off valves shall be mounted in the horizontal position. Check valves shall be swing type with outside lever and spring.

b. All piping, couplings, fittings, valves, etc. shall be Class 125 flanges meeting ANSI B16.1 Specifications, unless class 250 flanges are required for high head installations. All piping shall be factory flanged. Flanged coupling adapters, equal to Dresser Style 127, Rockwell 912, shall be provided on one side of the check valve to allow removal and replacement.

B. Allowable Velocities

1. Suction pipe velocities shall be in the range of two (2.0) to five (5.0) feet per second (Self priming pump suction velocity may exceed five (5.0) feet per second), but be less than 8 fps.

2. The force main velocities of flow shall be greater than two (2.5) feet per second but less than eight (8.0) feet per second.

C. Bypass Pumping

Connections shall be provided to allow emergency bypass pumping to occur. The bypass pumping shall have a Baver quick connect couplings, as indicated in the standard detail for all lift stations.

D. Pump Submergence Depth

1. Sufficient submergence of the pump or pump suction piping shall prevent vortexing within the wet well.

2. In no case shall the all pumps-off activation level be less than the minimum level required for successful pump operation, as recommended by the pump manufacturer.

E. Appurtenances

1. Consideration shall be given to protecting pump station structures and equipment from physical damage or clogging from solid material normally present in wastewater though the use of bar screen.

<u>Bar Screen</u>

Where required by the County Engineer, the influent sewer shall have an open flange connection within the wet well and have a bar screen with a clear opening of no less than 1 inch or more than 1-3/4 inch. Manually cleaned screens should be placed on a slope of 30 to 45 º from the horizontal. At design average flow conditions, approach velocities should be no less than 1.25 feet per second to prevent settling and no greater that 3.0 fps to prevent forcing material through the

openings. The bottom of the screen channel shall be placed at least six (6) inches below the invert of the incoming sewers to allow for some accumulation of screenings without affecting the flow in high water level in the wet well. Adequate clearances for ease of maintenance shall be provided. Bar Screen shall be built of Aluminum or Stainless Steel only.

2. Pump Removal Methods/Equipment

   a. Provisions shall be made so that the largest piece of equipment installed at the pump station may be removed, which may include hoisting equipment or designing clearance around the pump station for mobile hoisting equipment access.

   b. Station structures shall have access hatches, doors, skylights, etc. of sufficient size such that the largest piece of equipment may be removed without damaging the integrity of the structural design.

   c. Stations utilizing submersible pumps in wet wells shall provide for the removal and installation of the pumps without requiring entry into the wet well.

      Each pump shall be provided with guide rail and a stainless steel chain. Rail system and the chain shall be capable of withstanding the forces required to disengage the pump from the wet well. Rail system and the lift-out chain shall be stainless steel.

3. Access

   Ensure access for operation and maintenance is easy, unobstructed, and safe. Each station structure shall have separate means of access. Under no circumstance shall access to the wet well be provided through a drywell. Steps, ladders, stairs, landings, hatches, and other means of access shall conform to OSHA standards, local and state building codes.

4. Ventilation Equipment

   a. Above ground wet well housing must be ventilated, with power ventilation, to achieve the following:

      * Continuous ventilation: There must be twelve (12) complete air changes per hour.

   b. Stations shall be adequately vented to complete compliance with local and state building codes as well as OSHA and NFPA standards. At a minimum,

pump station wet wells shall be provided with a gooseneck-type vent. Active ventilation units shall also be acceptable. Vents shall be three (3) foot above 100 year flood elevation, comprised of sturdy material resistant to ultraviolet light and adequately supported to withstand damage during normal and emergency operation and maintenance. Vents shall be provided with an insect/bird screen of stainless steel, aluminum, and corrosion resistant material. Under no circumstance shall steel or galvanized steel be used.

c. Drywells or other enclosed pump station structures into which routine operator entry is required shall either have a positive pressure ventilation system that meets, at a minimum, the requirements of NFPA 820 "Standard for Fire Protection in Wastewater Treatment and Collection Facilities." Consideration shall be given to installing sensor and alarm systems to detect the accumulation of dangerous levels of hazardous gases.

F. Drainage

Station structures other than the wet well shall be provided with a means to remove accumulated water and wastewater from the structure. All floor and walkway surfaces shall be sloped to an appropriately sized drainage pipe. Drainage pipe shall convey wastewater to the wet well or wastewater collection system and shall be higher than the high-water alarm activation level or the maximum water level expected. The drainage pipe shall be provided with device to prevent backflow of wastewater and gases from the wet well into the structure.

G. Structure

1. Temperature - Consider controlling station temperature and humidity to a level appropriate for reliable operation of the electrical and instrumentation/control systems.

2. Hydraulic Force - All pump station structures shall be designed to withstand the hydrostatic forces that they will be subjected to, including uplift.

3. Corrosion Protection - The interior of the wet well shall receive two successive coats of an approved epoxy material.

4. Cover Slabs - for wet wells shall be reinforced concrete with integral cast in place access hatch covers. Cover slabs shall be reinforced as per ACI Code and specially reinforced around openings. Access covers shall be sized and positioned according to pump unit installation. Access covers and frames for pumps shall be a double leaf aluminum diamond pattern floor hatch certified by the manufacturer of being H-20-44 loading without permanent damage. Each leaf shall open 90º and be attached to the frame by steel hinges. The door shall have a lock in the open position and vinyl grip handle to release lock for closing.

The wet well access landing area shall have a "Retro-Grate" cover to permit safety access and washing the wet well walls. Grating shall be aluminum and coated with orange or safety yellow paint.

5. Wet Well - Wet well structures may be cast in place reinforced concrete or precast concrete construction. If precast units are utilized, they shall conform to the requirements of ASTM C478, with watertight joints per ASTM C443. The minimum wet well diameter shall be 6 feet.

   The wet well bottom fillets are to have a minimum slope ratio of 1:1.

6. Inlet & Discharge - Inlet sewer and sump discharges shall enter into a drop pipe that extends below the low pump vent water level to reduce air entrainment in the wet well. Discharge piping shall be designed to provide adequate thrust restraint during pump operating cycle. Inlet and discharge piping shall have stainless steel pipe supports and hardware.

5.06 Valve Vault

A. A separate valve vault shall be required for submersible pump stations. The valve vault shall consist of a precast rectangular base section, or a cast-in-place custom built section.

B. Vault shall have an aluminum access hatch. Steps or Structural Steps shall be centered with the access opening. All ladders or steps shall come equipped with a Retro-Grate ,internal safety post.

C. Vault shall be sloped and piped to drain into the Wet Well with a check valve.

D. Interior of valve vault shall be coated with appropriate epoxy system as wet well.

E. Check valve shall be of the horizontal swing arm with spring type with an outside weighted swing arm.

F. A tap isolation valves for pressure gages shall be supplied on both sides of the check valve for each pump.

5.07 Pump Controls

A. Control Sequence

On rising liquid level in the wet well, a non-mercury type float switch shall initiate operation of the lead pump at the elevation indicated on the DRAWINGS. Should the liquid level continue to rise to a point above the lead pump setting, a second non-mercury float switch would initiate operation of the Lag Pump. The pump(s) would continue to operate until the liquid level recedes to the point where a third non-mercury float switch would stop the pumps.

The two (2) pumps shall automatically alternate between the "lead" and "lag" positions by means of an electric alternator in the panel.

Should the liquid level continue to rise to a point above the "Lag Pump On" level, a fourth float switch would activate the alarm circuit.

The float settings shall be set such that the pump manufacturer's minimum submergence is maintained, there are 2 to 8 operating cycles per hour during average influent flow conditions, there is no less than 6" between the lead and lag setting, there is no less than 6" between the lag and high level setting and there is no less than 12" between the high level setting and the invert in to the wet well.

B. Control Panel

The duplex pump control panel shall be furnished to operate the pumps in the specified sequence. The control panel and all control equipment shall utilize equipment and components approved by a third party testing agency that is accredited by the NCBCC and accepted by the State of North Carolina, **and shall be so labeled as an assembled panel**. (See STD. No. PS 7)

The control equipment shall be housed in a NEMA 4X enclosure with hinged outer and dead-front inner doors. The outer door shall be fastened by quick release latches that require no tools to operate. The enclosure shall be of aluminum. The panel shall contain the following elements and accessories:

1. Incoming power circuit breaker - 3 pole. The circuit breaker must have a minimum ampere interrupting capacity of 10,000 symmetrical RMS amps.

2. A lightning arrestor shall be supplied in the control panel and connected to each line on the incoming side of the power input terminals. The arrestor shall protect against damage due to lightning strikes on the incoming power line.

3. A phase-loss/unbalance/reversal, under-voltage protection assembly with adjustable nominal voltage setting shall be supplied with three extractor type line voltage fuses. This device shall drop-out the pump control and auto-dialer power circuit if all phases drop below 90% or if any one phase drops below 80-83% nominal voltage. This device shall have a 5-second dropout delay and adjustable restoration time delay of up to five minutes.

4. A thermal magnetic molded case circuit breaker shall be supplied as branch circuit protection for each pump motor. The circuit breaker must have a minimum ampere interrupting capacity of 10,000 symmetrical RMS amps.

5. A NEMA-rated magnetic motor starter with ambient-compensated, quick-trip Class 10 overload sensing in each phase shall be furnished to provide over current and running protection for each pump motor. Pumps rated 7.5 horsepower and greater shall have Soft-Starter. Over current protection shall be provided by accurately sized, replaceable heater elements. Units requiring replacement of complete over blank load to match motor current are not acceptable. Overloads shall be equipped with auxiliary contacts for reporting an overload trip out to the alarm dialer.

6. An oil-tight pilot light for each pump shall be provided to indicate "Pump Running", "Over temperature", "Overload Tripped" and "Seal Fail" conditions. An additional lamp indicating "Control Power On" shall also be provided. The pilot lights shall have a replaceable, screw or bayonet base bulb. A "push to test" circuit shall be provided to enable testing of individual lamps.

7. A separate circuit breaker for control circuit shall be supplied to provide short circuit protection and a disconnect means for the control circuit.

8. Control power transformer (on 480 VAC stations) no less than 2 kVA.

9. Condensation heater with adjustable thermo switch shall be provided.

10. Running time meter for each pump shall be provided to measure hours and tenths of hours of operation, up to 10,000 hours. These shall be 120 VAC devices operating from the control voltage by an auxiliary contact of the motor starter.

11. Seal failure protection shall be provided to operate in conjunction with the moisture sensor in each pump motor. The control shall provide a dry contact closure for the alarm dialer. The circuitry shall include a seal failure indicating light. A set of dry contacts shall be provided for the alarm dialer.

12. Over temperature protection shall be provided to operate in conjunction with the over-temperature switch in each pump or motor, depending on the pump style. The control shall provide lockout of pump operation upon occurrence of high temperature. The circuitry shall include a high-temperature indicating light and reset button for each pump for high-temperature

alarm indication and manual reset capability. A set of dry contacts shall be provided for the alarm dialer.

13. Wet well level responsive automatic pump and alarm control system using four direct-acting liquid level sensors in the wet well shall be provided. The control system shall include a Hand-Off-Auto selector switch for each pump, automatic alternator (with manual override selector), 24-volt control power transformer for floats, control relays, alarm relays, control terminal board, and internal wiring as required. The control panel shall be configured such that the pumping station will restart automatically after a power failure. An adjustable time delay relay (0 to 60 second range) shall be provided in the "lag" pump circuitry to delay starting the "lag" pump after a power service interruption.

14. Red xenon strobe high level alarm light shall be mounted externally as shown on the DRAWINGS.

15. Power feed from the control circuit (after the phase monitor) to the alarm dialer.

16. The Control Panel shall be covered with a rainhood to protect components and personnel. (See STD. No. PS 6)

C. Control Floats & Accessories

Level control float switches shall be a molded polyethylene body with internal redundant polyurethane foam floatation, and containing a non-mercury tube-type switch inside. Each float switch shall have potted cable and switch connections and fine-strand #18 AWG cable with heavy duty synthetic rubber jacket. Cable length shall be as required to run un-spliced to the control panel.

Float switches shall be installed on a stainless steel cable and weight utilizing stainless steel clamps and hardware. The cable shall be suspended from a stainless steel bracket at the top slab of the wet well adjacent to the hatch cover. Each wet well shall have minimum of5 floats (high water, lead, lag, pump off and low level)

5.08 Pump Station Electrical Work

A. All wiring and electrical equipment shall conform to all applicable sections of the National Electrical Code (NEC), latest edition, and local electrical codes.

B. All pump stations shall be serviced with 3-phase, 4 wire power, with the neutral brought in and bonded. Stations with pump motors larger than 15 horsepower shall

have 480 volt, 3-phase power. Single phase to three phase converters shall not be allowed.

C. Plans shall include all conduit and wiring sizes, power riser and distribution diagrams, and switchgear sizes. All conduit shall be rigid metallic with threaded joints, with the exception of buried conduits, which may be PVC. Each conduit entering the pump control panel from the wet well shall be equipped with a conduit body immediately adjacent to the pump control panel. The conduits shall be sealed in the conduit bodies to prevent the migration of wet well vapors and moisture. Where power or control cables exit conduits, conduit bells and strain relief devices shall be provided. A vented junction box shall be placed between the wet well and the seal-off to ease the removal and installation of control wires and the pumps.

D. All switchgear, controls, distribution panels, etc. shall be located under an aluminum rainshield constructed of 3/16" material. In the case of very large control panels, a separate rainshield may be required. The rainshield shall be supported on schedule 40, 3" diameter galvanized steel posts, anchored in concrete, located at distances not to exceed 4 feet on center. An outdoor type, 40 watt fluorescent worklight shall be installed under the rainshield. This light shall be operated by a weatherproof switch. A GFCI convenience receptacle shall also be located under the rain shield. (See Std. No. PS 6)

E. A separate electrical distribution panel shall be provided for supplying the area light, work light, receptacles, RPZ enclosure, generator engine block heater and battery charger. This panel shall be fed from the feeder between the automatic transfer switch and the pump control panel and shall remain energized if the pump control panel main breaker is in the off position. On 480 volt stations, a dry transformer (10 kVA minimum) shall be provided for 120/240 volt power. (See Std No. PS 7).

F. All electrical fixtures are to be explosion proof and located in serviceable locations. Interior electrical conduit shall be plastic coated rigid metal or approved PVC conduit. All conduit shall be non-corrosive. Seals shall be installed in the conduit to prevent gases from traveling to the panel box.

G. Provide manual utility disconnct switch before service wiring enters ATS or any electrical panel. To be located under electrical panel structure.

5.09 Alarm Dialer System

A. General

Each pump station shall be equipped with a telemetry/auto-dialer in addition to audible and visual alarms. Contact County Engineer for any other special equipment.

It shall be the responsibility of the Developer/Contractor to install the necessary switches, contacts, relays, etc. and associated wiring required to monitor and report

the alarm conditions as noted herein. The Contractor shall also be responsible for arranging for the telephone service in the name of the MCPW and installation of the required phone jack.

The alarm dialer system shall be completely self-contained and fully automatic. The system shall monitor a minimum of eight (8) independent alarm conditions, plus power failure. Common alarm conditions shall be wired together (in series or parallel, as appropriate) to limit the number of independent conditions. Alarm status shall be indicated by the operation of any single or multiple set of normally open or closed isolated contacts. Multiple faults shall be reported in one (1) call if necessary. Alarms shall be capable of being acknowledged by either local or remote means.

The system shall be connected into the telephone line network through a self-contained FCC approved coupler and shall plug into a standard RJ 11 telephone jack supplied with the telephone line. A regular telephone line shall be used with the system. The dialer shall have surge protection on the power and telephone lines.

The system shall operate from a 120 VAC source (fed from the pump control circuit - to sense phase loss as a power failure) with continuously float charged batteries capable of 24 hours standby operation during power outages. The operating temperature range shall be -20°F to 130°F.

Upon operation of any alarm contact, the system shall address the telephone line, wait for a dial tone, and begin dialing the first eight (8) field-programmed telephone numbers, up to sixteen (16) digits in length. The dialer shall be capable of either tone or pulse dialing. The voice message shall be electronically recorded in the field to clearly state alarm conditions.

Alarm contact connections to the dialer system shall be provided through standard wiring from the within in the pump control panel, as previously described in these Specifications, and the generator control panel, achieved by dry contacts or mod-bus connections.

B. Wireless Alarm Communication

A Wireless Alarm Communicator provides a wireless communication link between the alarm panel and a central station receiver. The 15” x 13” x 7” unit normally sits atop the electrical panel roof and is housed in a lockable, NEMAX weather tight enclosure.

The following alarm conditions shall be monitored at the pump station. The fault conditions shall be grouped to provide eight (8) alarm groups to the dialer:

Fault I - High Level Wet Well
Fault II - Pump #1 Failure
Fault III - Pump #2 Failure
Fault IV - Generator Operating
Fault VI - Low Generator Fuel
Fault VII - Commercial Power Failure
Fault VIII -Pump #3 Failure (if applicable)

Fault V - Generator Fail

Each pump failure alarm condition shall include failure due to overheating, overloading and seal failure (submersible pumps only). The alarm conditions above shall appear on a label to be mounted to the dialer.

C. Enclosure & Mounting

The system shall be housed in a heavy gauge, JIC, UL listed steel cabinet painted with epoxy or baked-on enamel paint, NEMA 4. A thermostatically controlled strip heater shall be provided inside the enclosure. A power feed for the enclosure heater, separate from the dialer operating power, shall be provided.

The unit shall be mounted on the electrical rack under the rainshield.

D. Shop Drawings

The supplier shall furnish six (6) copies of Shop Drawings giving complete descriptive information on the alarm dialer system to be provided.

E. Manufacturer

The alarm dialer system shall be the "Chatterbox" model as manufactured by RACO, or equal approved by the MCPW. The appropriate expansion module(s) shall be included to provide a sufficient number of alarm inputs.

F. Dialer Programming

The alarm dialer shall be programmed in accordance with the MCPU's directives.

G. Telephone Service

The CONTRACTOR shall arrange for telephone service, in the name of the MCPW, to the pump station electrical rack. Wiring from the telephone system network interface to the automatic dialer enclosure shall be completed by the CONTRACTOR.

H. Alarm Light and Horn

This unit shall be mounted atop the rainhood with the following items: 1) Strobe Lamp for the alarm light, 2) a pushbutton to silence the horn and strobe lamp, 3) a cycle timer to be added so the alarm on and off time can be adjusted from 0 to 60 sec., 4) the timer shall start with the off delay time first with an initial setting of 10 sec. off and 5 sec. on, and 5) the alarm test to be pushbutton.

I. Start-Up Services

The supplier shall provide complete installation and operating instructions for use by the MCPW. Start-up by a factory representative is required and shall be conducted in the presence of the Engineer and MCPW staff.

5.10 Standby Power Generator System

A. General

Moore County requires that all pump or lift stations be provided with a complete standby electric power system consisting of a Diesel engine driven generator set, an automatic load transfer switch, time switches, contactors, wiring, conduit, piping and accessories. The engine generator set and automatic load transfer switch shall be completely built, tested and shipped by a manufacturer who has been regularly engaged in the production of such equipment and who has parts and service facilities locally available so there is one source of supply and responsibility. The performance of the electric plan shall be certified by an independent testing laboratory as to the plant's full power rating and voltage and frequency regulation. All equipment shall be guaranteed free from defects in workmanship and material for a period of 5 years or 1500 running hours from date of acceptance. The engine-generator set shall be enclosed in a weatherproof housing which sets top of the fuel tank. Attached to the alarm dialer from the generator shall be Low Fuel, Generator Operation and Generator Fail warnings.

B. Automatic Transfer Switch

The manufacturer shall furnish schematic and a wiring diagram for the particular automatic transfer switch and a typical interconnection wiring diagram for the entire standby system. The automatic transfer switch shall be rated for continuous operation in ambient temperatures -25º F to +125º F. The transfer switch shall be rated for all classes of load, both inductive and non-inductive, at 600-volts, and shall be designed, built, and tested to close on an inrush current up to and including 20 times the continuous rating of the switch without welding or excluding burning of the contracts. The transfer switch shall be capable of enduring 6000 cycles of operation, at rated current, at a rate of 6 cycles per minute, without failure. One cycle shall consist of complete opening and closing of both sets of contacts on an inrush current 10 times the continuous rating of switch. The automatic transfer switch, with terminal lugs for either copper or aluminum wire, shall have individual, heat resistant chambers enclosing solid silver cadmium oxide, double break contracts. The transfer switch, with mechanical and electrical interlocks to prevent simultaneously energizing both normal and emergency service, shall be mechanically held on both sides, with manual operator and auxiliary contacts rated 6-amp, 120-volt AC; 3-amp, 240-volt AC on both sides. It shall be well mounted in a NEMA 12 enclosure. Control accessories shall mount on a dead-front, swing-out control accessory panel to avoid shock hazard while adjusting control functions, but will swing out exposing the wiring to facilitate servicing. Indication lamps and meters shall be set in the front door of cabinet. Transfer switch shall be of the programmed transition type which shall provide dead band time adjustable from 1 to 10 seconds when the load is not connected to the normal power source, nor to the engine generator. Control accessories shall be solid state type and shall provide the following functions:

1) Monitor each ungrounded line with calibrated dial, adjustable voltage, solid state UNDERVOLTAGE SENSORS to sense a decrease of voltage below a set point, or a loss of voltage on any phase or a reversal of phases on the normal power source. Voltage sensors shall be temperature compensated for 2 percent maximum deviation above the temperature range -25 º F to +175 º F.

2) Signal the engine-generator set to start in the event of a power disturbance as sensed by the monitoring system. A solid state TIME DELAY START (adjustable from 0 to 60 seconds) shall delay this signal to avoid nuisance startups on momentary voltage dips or power disturbances.

3) Retransfer the load to the line after normal power restoration. A TIME DELAY RETRANSFER (adjustable from 0 to 30 minutes) shall delay this transfer to avoid retransfer in case of short-term normal power restoration.

4) Provide an automatic RETRANSFER TIME DELAY BYPASS to retransfer the load from generating set to normal source if generating set output interrupts after normal sources restore voltage.

5) Signal the engine-generator to stop after load retransfer to normal source. A solid state TIME DELAY STOP (adjustable 0.5 to 5 minutes) shall permit engine to run unloaded to cool down before shutdown.

6) Provide a TEST SWITCH to simulate an interruption of power from the normal source.

7) Provide a constant-voltage automatic charging (1.40 to 1.24 volt per cell) SCR current limited, BATTERY FLOAT CHARGER to maintain fully charged cranking batteries.

8) Provide an EXERCISER CLOCK to automatically start the generating set at regular intervals and allow it to run for a preset time period, such as 30 minutes per week.

9) Provide WITH LOAD – WITHOUT LOAD SELECTOR SWITCH to select test or exercise as follows: “without load”, the generating set runs unloaded or “with load”. The automatic transfer switch transfers load to generating set, after time delay, the same as it would for a normal source interruption.

10) Provide a CONTROL DISCONNECT PLUG to electrically disconnect the control section from the transfer switch for maintenance service during normal operation.

11) Provide two (2) auxiliary relays or auxiliary contacts on the main power contractors (normal and emergency) so that a remote alarm or light can be

connected to indicate that normal power has been lost and that power is being supplied from the engine generator set.

12) The automatic load transfer switch and/or the generator control panel shall have relays and wiring which provide contacts for closure in the event of a generator-set failure after transfer to emergency power. The contacts shall be made available for connection to the existing alarm transmitter.

13) Provide two (2) sets of auxiliary contracts to be actuated when the transfer switch is in the normal position and two (2) sets of auxiliary contacts to be actuated when the transfer switch is in the emergency position.

14) Provide a "neutral" position timer (adjustable from 0 to 10 seconds) to allow loads, such as motors, to come to a complete stop before being transferred to another source.

The automatic transfer switch to be supplied as part of the standby power system shall meet all applicable requirements set forth by the National Electrical Code and OSHA. The transfer switch shall also conform to the requirements as specified below:

1. <u>Enclosure</u>

Mounting type ..... Surface

Enclosure type ..... NEMA 3R, lockable

2. <u>Electrical Ratings</u>

Operating voltage ..... Compatible with station voltage

Operating current ..... No less than main disconnect

Withstand and closing rating ..... 10,000 Amps, RMS, Symm. (min.)

3. <u>Transfer Switch</u>:

Operating mechanism ..... Single solenoid

Holding mechanism ..... Mechanical

Interlock ..... Mechanical and electrical

Contact material ..... Silver alloy

Neutral delay ..... 0.1 - 10 seconds

4. <u>Timer Setting Ranges</u>:

Utility dropout 70-95%

Utility pick-up 70-95%

Utility interrupt delay ..... 0.1-10 sec.

Engine min. run ..... 5-30 min.

Engine warm-up ..... 5-180 sec.

Return to utility delay ..... 1-30 min.

Engine cooldown ..... 1-30 min.

Standby voltage 70-90%

Standby frequency 80-90%

Exerciser ..... Once/week

5. **<u>Operation Selectors</u>:**

Exercise ..... With/Without load

Engine warm-up bypass ..... On/Off

Neutral delay ..... On/Off

Mode selector ..... Manual Test/Standby/Off

C. Standby Power System Capacity

The standby power system shall be capable of providing continuous standby power for the wastewater pumping station. The generator set shall be capable of starting all pump motor loads <u>sequentially</u> with the full miscellaneous load applied, with no more than 30% dip. **The *minimum* acceptable generator set rating shall be 25 KW for any station.** The CONTRACTOR/DEVELOPER shall coordinate the starting requirements of the exact pumps being furnished on the project with the generator set supplier to insure that the generator set has adequate motor starting capability.

D. Installation

The generator set shall be mounted and anchored to a reinforced concrete pad, one foot above the 100 year flood, located to provide adequate access for fueling and servicing. The exact dimensions of the pad, conduit entries and anchor bolts shall be based on the manufacturer's shop drawings. The pad shall have outer dimensions 1 foot greater than the footprint of the base tank, to provide 6" of exposure on all sides. All exposed edges shall be chamfered or rounded with an edging tool.

All connections to it shall be made with flexible pipe, conduit, etc., to minimize transfer of vibration.

The automatic transfer switch shall be mounted beneath the rainshield as shown on the DRAWINGS. All electrical work shall conform to the National Electrical Code.

Prior to shipment, the following tests shall be conducted at the plant of the manufacturer, and certified results of these tests shall be delivered to the Engineer for transmittal to the Owner:

Full load test of the generator set for one hour with fuel consumption, output voltage, engine speed, voltage and speed-regulation and generator winding temperature measured and recorded at ten-minute intervals.

E. Tests

Authorized Distributor of the manufacturer shall inspect the equipment installation after it is completed and perform initial start-up and test of the system and shall submit a certificate of this inspection and test. The date of acceptance as referred to hereinbefore is defined as the date on which this certificate of inspection and test is received by the Owner. The following test shall be performed in the presence of the Engineer or their representative:

(1) Generator output voltage unloaded and loaded, each phase, based on 2-hour load bank test

(2) Voltage dip as loads are applied

(3) Complete operating sequence (simulated utility power failure and restoration)

(4) Pressure test engine cooling system for leaks

(5) Test battery charging systems

(6) Test operation of all safety systems

Upon completion of break-in and testing, the engine shall be serviced as follows:

- Change engine oil and filter
- Verify anti-freeze protection (-34° F)
- Refill fuel tank (tank shall be left full)
- Check belt tension
- Check battery connections and state of charge

During this start-up period, the MCPW Utility maintenance personnel shall be fully instructed in the proper maintenance of the standby power system.

F. Manufacturer

The generator set, controls, and transfer switch shall be furnished by a single supplier. The generator set and accessory equipment shall be supplied by Caterpillar/Olympian, Detroit Diesel/Spectrum or Kohler.

The supplier shall be the authorized dealer of the engine-generator set manufacturer, and shall be fully qualified and authorized to provide service and parts for the engine and generator at any time during the day or night. Parts and service shall be available 24 hours per day 7 days a week, from a location within a 100-mile driving radius of the location of the installed generator set.

G. Shop Drawings

Prior to purchase of stand-by power generation equipment, the Contractor shall submit not less than four (4) sets of data to the Engineer for approval, including: equipment data, accessories, sizing calculations, etc., as may be appropriate to determine compliance with these Specifications.

H. Operating Instructions

Six (6) complete copies of operating instructions and parts list shall be provided prior to acceptance of the unit. Parts list shall include schedule of type and quantity of parts recommended for stock.

I. Spare Parts:

The following spare parts shall be furnished at the time of start-up to MCPW:

Engine Fan & Accessory Drive Belts .....1 sets

Oil, Fuel & Air Filters.....2 sets

Spare Indicator Lamps & Fuses .....2 sets

Other items as may be recommended by the manufacturer.

Spare parts shall be boxed and labeled with the pumping station identification.

J. Warranty

The complete standby power generating system shall be warranted for one year after the acceptance of the generating system by the MCPW. The warranty shall cover all defects in equipment, parts, assembly and installation. The warranty shall be issued in writing by the supplier and delivered to the MCPW.

5.11 <u>Pump Types</u>

A. Provide standby auxiliary pumping system, including bypass pumps and the auxiliary pumping system shall be activated by the Automic Trans for switch or other approved means.

B. For Gorman Rupp pumping systems, an siti-start auxiliary pumping system is acceptable.

5.12 Force Main

A. General

Force Mains shall be constructed of ductile iron pipe, PVC C-900 or PVC C-905 coated with Protecto 401 Cement epoxy or approved equal. Force Mains 8 inch and smaller shall have a minimum of 3 feet of cover and Force Mains larger than 8 inches shall have a minimum of 3.5 foot cover. (See STD. No. PS 9)

Force Mains shall be encased by a steel encasement pipe under secondary roads, primary roads and railroad crossings.

Force mains shall be sized such that velocities are not less than 2.5 fps nor greater than 5.0 fps.

All force main construction methods, including trench excavation, bedding, backfill, etc. shall conform to the requirements installation as specified in Standard Specifications, for water mains.

All force main pipe and fittings shall be adequately blocked against thrust reaction in accordance to the Standard Details for water mains.

Force mains shall not be closer than 50 feet from any private water supply well or 100 feet from a public water supply well.

Force mains shall include a plug valve ten feet outside of the station but inside the fence.

B. Velocity

B. Wastewater velocity occurring in a force main shall be calculated using the continuity equation:

$$V = \frac{0.4085Q}{D \times D}$$

Where:

V = velocity (feet per second)
Q = pumping rate of single pump (cubic feet per second)
D = diameter of pipe (inches)

C. Force mains shall be adequately anchored with thrust blocks on MJ pipe bends, tees, plugs, and at any other location where a change in flow direction occurs.

C. Ductile Iron Pipe

All ductile iron pipe shall be designed as per ANSI/AWWA C-151/A21.50.02 for a minimum working pressure of 200 psi. Pipe wall thickness shall conform to ANSI/AWWA C-150/A21.50-02. Pipe up to and including 12 inch diameter pipe shall be Pressure Class 150 (min.), while pipe greater than 12 inch diameter shall be Pressure Class 250. The County Engineer may require heavier class pipe on a case-by case bases.

Pipe joints shall be of the push-on type with rubber gaskets as per ANSI/AWWA C-111/A21.11-07. Mechanical or special joints may be used as project requirements dictate or as required by the County Engineer. Pipe lining shall be Cement-Epoxy, on the interior, while an external coat of bituminous material, all in accordance with ANSI/AWWA C-104/A21.4-03. Where restrained joints are indicated Mega-Lugs or Grip rings shall be used.

Ductile iron pipe shall be as manufactured by Griffin, U.S. Pipe, American, or Clow. The pipe shall be furnished in 20-feet or 18 feet in lengths and be American made.

D. Polyvinyl Chloride Pipe, C-900 or C-909

PVC pipe shall be rigid polyvinyl chloride with integrally formed, factory fabricated bell, with "slip" joint rubber gaskets conforming to ASSA C-111.. It shall be suitable for all conditions imposed by plan locations and for a minimum working pressure of 200 psi, plus 100 psi surge allowance at 73 degree F. Pipe shall be Type 1, Grade 1, made from clear virgin material and shall conform to the requirements of ANSI/AWWA C-900-07. All pipe shall bear the National Sanitation Foundation Seal of Approval, the manufacture's name, and class of pipe. The joints shall conform to ASTM D3139-98.

Provision must be made for expansion and contraction at each joint, through the rubber gasket and pipe bell. Where restrained joints are indicated, Mega-Lugs or Grip Rings shall be used.

E. HDPE, High Density Polyethylene Pipe

HDPE pipe for directional drilling must be DR-9, 250 psi, and sized to have the inside diameter of the HDPE pipe to match the inside diameter of the connecting Force Main. Connection of HDPE and Ductile Iron shall be level and made to prevent binding of HDPE. All pipe shall be labeled ANSI/AWWA C906 and C901. Pipe to conform to ASTM D2737.

HDPE after directional drilling should be allowed to contract (release) for 30 days after which connection shall be made to three joints of DIP with Restricted

Mechanical Joints, gate valves and reducers. A valve shall be placed between the first and second joint of DIP at each end of the HDPE.

F. Fittings

Fittings for ductile iron pipe force mains, 4-inch diameter and larger, shall be ductile or cast iron. Provide Stainless Steel bolts and nuts.

G. Air Release & Vacuum Relief Valves

1. Air release valves shall be located on lines where hydraulics indicates gas pockets may accumulate.

2. The route of the force main shall be such that the number of air release and vacuum relief valves are minimized to the greatest extent possible.

3. A Combination Valve will be needed where the distance between the low points and high points in the Force Main exceeds 2 vertical feet. Each valve shall be quick-opening, slow-closing type to prevent the development of hydraulic surge conditions.

4. Use air release valves with flood protection in areas within the 100-year floodplain or areas where flooding in anticipated to occur. Each valve shall be equipped with flushing connections and one set of flushing hoses. Use CLA-VAL Crispin or equal. (See STD. No. PS 8)

H. Gate Valves

12 inch and Smaller:

Gate valves 12 inch and smaller shall be of the resilient wedge type conforming to ANSI/AWWA Standard C-509-01. They shall be designed for a working pressure of 200 psi. The valves shall be open-left (counter clockwise), non-rising stem, gray cast iron or ductile iron body, with O-ring seals and a 2 inch square operating nut. Extension stems shall be furnished when depth of bury places operating nut is in excess of four feet below finished grade.

I. Plug Valves

Plug Valves shall be used in lieu of Gate Valves as they can be opened and closed without concerns of creating a water hammer in sewer lines. Valves shall be full body opening.

Plug Valves shall meet or exceed AWWA C-517. Valves can be side or top cranked with heavy-duty fully rubber encapsulated plug, V-type packing that is self adjusting and replaceable while under pressure. They shall be stainless steel radial for upper and lower bearings that is permanently lubricated for extended life.

J. Valve Markers

Valve Markers are to be installed in rural areas, near the right-of-way line, to better identify their location for all other valve locations. In urban areas, valve markers are to be installed only as recommended by the Engineer.

For Valve Marking and Valve Box Cover protection, provide a concrete protector ring.

K. Stream Crossings

1. Force mains shall be routed such that the number of stream crossings is minimized. The crossing shall be as nearly perpendicular to the stream flow as possible. Ductile Iron pipe with joints equivalent to water main standards shall be used to construct force mains that cross streams.

2. Ductile Iron pipe with flanged joints, with adequate supports, shall be used for aerial stream crossing. Supports shall prevent frost heave, overturning, and settlement, freezing, heaving, and the impact of floodwaters and debris shall be considered during the design of aerial crossings. The bottom of the force main pipes shall be placed no lower than 2 feet above the 100-year flood stage of the stream unless approved by the Engineer.

L. Testing of Force Mains

All force mains shall be tested to water main standards. The section of force main to be hydrostatically tested shall be slowly filled with water at a rate which will allow complete evacuation of air from the line.

The line shall be tested to a pressure of 200 psi as measured at the lowest elevation of the line for the duration of at least 24 hours. The pressure gauge used in the hydrostatic test shall be calibrated in increments of 5 psi or less. At the end of the test period, the leakage shall be measured with an accurate water meter.

No pressure pipe installation will be accepted until leakage is less than the number of gallons per hour for each section tested, as determined by the following formula:

$$Q = \frac{LD\ SQRT(P)}{148{,}000}$$

Q = Allowable leakage, in gallons per hour
L = Length of pipe tested, in feet
D = Number of joints in the length of line under test
P = Pressure, in pounds per square inch

M. Utility Warning Tape

All force mains shall have Utility warning tape installed 18" below finish grade and extended into valve boxes and manholes to facilitate location. The tape shall read "Sewer Force Main Buried Below".

N. Tracer Wire

Tracer wire shall be installed on all Force Mains. The wire shall be number 12 gauge and colored Green.

All spliced or repaired wire connections in the tracer wire system shall be made using a Wing Nut Wire Connector (for two to four number ten wires), or approved equivalent, and made waterproof using an approved buried service wire closure. The buried service wire closure shall be Frame Gel Closure or equivalent. Utility warning tape shall be placed at a minimum of 18" beneath the ground surface and over the line . (See Std. No. PS 9) The testing of tracer wire, after construction, shall be performed by the contractor with the Engineer or their representative present.

O. Receiving Manholes

All receiving manholes shall be fully coated inside with an epoxy approved by the County Engineer. Additional down stream manholes shall be fully coated as required by the County Engineer. If the entrance pipe is 2 foot or greater higher than the outlet pipe flow line a drop line shall be installed with a 45 degree bend aimed at the outlet invert. (See STD. No. PS 10)

5.12 Quality Assurance and Quality Control

The following items are required to assure that the construction quality is acceptable and that information has been provided to assure proper maintenance quality:

A. Six Operations and **Maintenance (O&M) Manuals** shall be prepared and provided to MCPW before testing and start up for each pump station.

   A copy of the O&M Manual shall be kept at MCPW office. The O&M Manual shall be kept on file for the life of the pump station and updated as required.

B. Approved **Shop Drawings**, including design data for all installed equipment and each major component and a pump curve/system curve analysis showing the design operating point(s) and control panel wiring diagrams.

C. Complete **Operating Instructions**, including preventative and predictive maintenance, for all installed equipment and each major component.

   Instructions for start-up/shut-down as well as for calibration and adjustment of all installed equipment and each major component.

D. **Warranty** information for all installed equipment and each major component.

E. Construction **Record Drawings** that have been signed, sealed, and dated by a North Carolina PE. Such drawings shall include, but shall not be limited to, the following:

1. Plan and profile views of the force main as installed as well as its proximity to other utilities and natural resources. The locations of specific force main materials as well as any valves and other force main appurtenances shall be indicated.

2. Construction record detail drawings of the pump station.

5.13 Security

A. **Access to Pump Station** structures/equipment/appurtenances shall be restricted.

1. All entry into pump station shall be locked.

2. Fencing shall be six (6) feet in height and of sufficient material to deter entry. Locked gates, a minimum of 12-feet wide, shall be provided to allow vehicular access.

B. **Safety Placards**, as required by OSHA, shall be provided and be readily visible. (See STD. No. PS 11)

C. A pump Station **Identification Sign** shall be posted, with the name, emergency number, Station Address and instructions to call in the event of an alarm condition or other emergency.

D. When non-submersible pumps are used above ground, a building **Enclosure** with Gorman-Rupp Pumps shall be constructed to protect the pumps. If non-submersible pumps are vaulted below ground or if submersible pumps are used no building shall be constructed over the pumps.

SECTION 11396

MAGNETIC FLOW METER

1. General:
    a. Function: Measure, indicate, and transmit the process flow in a full pipe. Meter must be a full bore meter with the magnetic field traversing the entire cross-section of the flow tube. Insertion magmeters or multiple single point probes inserted into a spool piece are not acceptable.
    b. Type: Magnetic flowmeter, operating based on Faraday's law, using a pulsed dc type coil excitation with high impedance electrodes.
    c. Parts: Flow tube, transmitter, interconnection cables, mounting hardware.
    d. All magnetic flowmeters shall be supplied with epoxy packs to insure conduit seals. All magnetic flowmeters shall be rated for submersible proof enclosure for 24 hours under 10' of water.
    e. The mag meter shall be supplied with a digital readout. Contractor shall mount the digital readout under the rain shield shown on the drawings. Contractor shall supply and install all necessary signal and power cable and conduit necessary to locate the readout under the rain shield.
    f. Meters shall be as manufactured by ABB, Omega, McCrometer or approved equal.

2. Service: Raw Sewage

3. Performance:

    a. Range: 1000 to 1 for 6" and smaller, 1500 to 1 for 8" and larger.
    b. Accuracy: Accuracy shall be +/- .2% optional for all flow rates greater than 1.7 feet per second.
    c. Repeatability: ±0.05% or ±0.0008ft/s, whichever is greater.
    d. Calibration shall be per compliance with OIML R49 Type P standards
    e. Flow range: As noted

4. Process Connection:

    a. Meter Size: As noted
    b. Connection Type: Flanged: ASME/ANSI B16.5 Class 150 in sizes up to and including 24"

        For sizes larger than 24"
            ANSI/AWWA C207-94 Class B (87 psi)
            ANSI/AWWA C207-94 Class D (150 psi)
            ANSI/AWWA C207-94 Class E (275 psi)

        For sizes larger than 24" requiring 150# rated flanges
            ASME/ANSI B16.47 Series A Class 150 not available, use ANSI/AWWA C207-94 to required pressure rating

    c. Flange Material: Carbon steel
    d. Pressure Rating: Meter system shall be fully rated to the same design pressure as the flanges

5. Flow Tube:

    a. Meter Tube Material: Carbon Steel: ¾ - 8"
        304 stainless steel: 10" and larger
    b. Liner Material: Polypropylene or Elastomer for Flanged style

c. Electrode Type: Conical self cleaning electrodes
d. Electrode Material: 316 stainless steel or as recommended by the manufacturer
e. Enclosure Classification: Standard as submersible in clean water and buriable with overhead protection (IP68, NEMA 6P)
f. Housing Material: Shall be ABB Plastic or Epoxy Coated Carbon Steel
g. Grounding: Grounding rings or grounding electrodes shall be provided per manufacturer's recommendation
h. Submergence: Continuous in clean water to 30ft and direct burial 3 to 16 ft IP68/NEMA6P.
f. Octagonal Bore Design: Sensors in sizes of 1.5" to 8" shall be Octagonal Bore Design for blunt profile and reduced piping diameters
g. Sensors in sizes 10" and larger shall be provided with full bore design to reduce head loss
h. Grounding electrode design shall be required along with grounding rings per manufacturer's recommendation

6. Transmitter:

a. Power: 85 to 265 VAC or 11 to 24 VDC
b. Display: Three line back-lit graphical display with capacitive keys; allows for external configuration without removing covers and compromising the integrity of environmental classifications.
c. Bi-direction flow: Forward and reverse flow indication; total and rate 2x10-digit user configurable display.
d. Totalizers: Three 9 digit totalizers for forward, reverse and net
e. Enclosure: Transmitter made of Aluminum
f. "Through The Glass Control" (no key pad; capacitance keys)
g. HART protocol standard
h. Integral Transmitter rotate-able up to 270 degrees
i. Transmitter Module, 180 degrees rotate-able
j. IP 67
k. Calibration shall be per OIML R49 Type P standards
l. Type "P" *continuous* self checking capabilities (not just on start-up)
m. Redundant data storage in sensor and transmitter with continuous replication of calibration factors, meter size, serial numbers, and site-specific settings.
n. Infrared service port for meter configuration and diagnostic interrogation.

7. Calibration:

a. Test Mode: Provide the ability to verify the accuracy of the unit and the integrity of the current loop without any external equipment.
b. Meter calibration shall be compliant to OIML R49 Type P, self-calibration requirements
c. Meter must be able to generate periodical simulated signals that verify that the output is within predefined limits
d. Coil Inductance and resistance along with electrode voltage and impedance must be verifiable through diagnostic functionality
e. Warnings and Alarms: Shall be classified to NAMUR NE 107 standards. Meter must have ability to display severity of warning with "maintenance, check-function, failure and out of spec" warning indications.
f. Alarm priorities shall be classified as: "None; Maintenance; Out-of-spec; Function check; and Error."
g. The duration of an alarm, time-summation for that alarms and time elapsed since last alarm message must be recorded and accessible

h. All replacement transmitters shall be interchangeable without need for programming sensor calibration factors, meter size, site information, and serial numbers
i. Insitu Calibration Verification: This system shall be used to verify in a quantifiable manner the meter's current conditions vs. the meters condition when originally manufactured. This calibration verification of the meter shall be performed without need for physical access to the meter flow tube.
j. Measurement diagnostics shall be in accordance with OIML standards, which shall include self-verification of the flow meter system including, transmitter, cable, electrodes and coils; through software the system shall have the ability print a certificate of compliance to OIML accuracy standards.
k. Meters to be designed, manufactured, and calibrated in an ISO9001, UKAS/NAMAS, NIST, or NATA certified facility. Flow facility must be certified by volume or weight certified provers. Facility must have the capability to hold the flow rate at the specified calibration points for a minimum of five minutes to allow stabilization for flow and repeatability point checks.

-- End of Section --

SECTION 13120A

FIBERGLASS METERING MANHOLE

PART 1 GENERAL

1.1 REFERENCES

A. ANSI/AWWA F101 - Contact Molded, Fiberglass-Reinforced Plastic Wash Water Troughs and Launders; American Water Works Association.

B. ASTM D 256 - Standard Test Methods for Determining the Pendulum Impact Resistance of Notched Specimens of Plastics.

C. ASTM D 638 - Standard Test Method for Tensile Properties of Plastics.

D. ASTM D 790 - Standard Test Methods for Flexural Properties of Unreinforced and Reinforced Plastics and Electrical Insulating Materials.

E. ASTM D 2583 - Test Method for Indentation Hardness of Rigid Plastics by Means of a Barcol Impressor.

F. ASTM D 3753 - Standard Specification for Glass-Fiber-Reinforced Polyester Manholes.

1.2 SUBMITTALS

A. Submit under provisions of this specification book.

B. Product Data: Test results of fiberglass reinforced plastic laminate.

C. Shop Drawings: Show:

1. Critical dimensions, jointing and connections, fasteners and anchors.
2. Materials of construction.
3. Sizes, spacing, and locations of structural members, connections, attachments, openings, fasteners, and loads.

D. Manufacturer's installation instructions.

1.3 DELIVERY, STORAGE, AND HANDLING

A. Store products indoors and protect from construction traffic and damage.

PART 2 PRODUCTS

2.1 MANUFACTURER

A. Provide products manufactured by Warminster Fiberglass Company, ABB, or prior approved equal.

B. Requests for substitution will be considered in accordance with provisions of these specifications.

C. Substitutions: Changes in specified manhole features are not acceptable.

2.2 METERING MANHOLES

A. Fiberglass Laminate:

1. Tensile strength (ASTM D 638): 14,000 psi.
2. Flexural strength (ASTM D 790): 25,000 psi.
3. Flexural modulus (ASTM D 790): 1,000,000 psi.
4. Impact, notched, Izod (ASTM D 256): 15 ft-lb/in.
5. Barcol hardness (resin-rich surface) (ASTM D 2583): 40 minimum, average.
6. Coefficient of thermal expansion, average (ASTM D 696): 0.000105 in/in/degree F.
7. Test coupons prepared in accordance with ASTM D 618.
8. Chemical resistance: Comply with ANSI/AWWA F101, Type II classification.

B. Construction: Fiberglass reinforced plastic, complying with ASTM D 3753; factory-assembled, ready for installation except for field-installed equipment.

1. Interior surface smooth and resin rich; free of pits, porosity, cracks, crazing, and dry glass.

2. Exterior laminate: 1/2 inch thick, minimum, consisting of polyester resin with 25 percent minimum glass content.

3. Cover: 1/4 inch thick fiberglass, hinged one side, with hasp for locking; provide soft neoprene sponge gasket for sealing.

4. Inlet and outlet pipes: Integrally molded to manhole with laminates on both the interior and exterior surfaces; inlet and outlet boots with stainless steel straps to diameter of inlet and outlet pipe.

5. Access ladder: Fiberglass; bolted to manhole wall.

6. Mounting flange: 4 inch, integrally molded around circumference of manhole for anchoring to concrete pad.

7. Gasket: 1/2 inch thick neoprene sponge pad.

8. Size: 48 inch diameter, with overlapping watertight cover.

9. Size: As indicated on drawings.

10. Height: As indicated on drawings.

C. Magnetic Flow Meter: Meter shall meet the specifications and parameters as noted in Section 11396. Meter shall be 6” in-line with readout signal to display mounted on aluminum panel provided per detailed drawings.

D. Accessories:
1. Anchor bolts: Type 304 stainless steel.
2. Full open, hinged cover with locking latch.
3. Staff gauge graduated in 50 divisions per foot mounted inside flume.
4. Bushing for ultrasonic transponder mounting.
5. Bulkhead fittings.

PART 3 EXECUTION

3.1 EXAMINATION

A. Verify that dimensions are correct and project conditions are suitable for installation. Do not proceed with installation until unsatisfactory conditions have been corrected.

3.2 INSTALLATION

A. Install products in accordance with manufacturer's instructions.

B. Ensure that products are installed plumb and true, free of warp or twist, within tolerances specified by the manufacturer and as indicated in the contract documents.

C. Verify that concrete slab is level and smooth trowelled. Level with grout if necessary. Ensure that piping is self-supported by bedding.

D. Handle manhole using slings of nylon or similar fabric. Do not drop or impact.

E. Place sponge pad on concrete slab. Drill holes in accordance with template for stainless steel anchor bolts.

F. Lower manhole onto pad and install anchor bolts.

G. Check level of flume in both planes, and adjust as required.

H. Connect piping. Do not lubricate neoprene boots. Secure with stainless steel clamp.

I. Backfill with pea gravel, 1/4 inch to 3/4 inch diameter, specified in Division 2, using uniform lifts not exceeding 12 inches.

J. Where cut holes are required, seal as directed by the Engineer.

3.3 ADJUST AND CLEAN

A. Clean surfaces in accordance with manufacturer's instructions.

B. Remove trash and debris, and leave the site in a clean condition.

END OF SECTION

FLOW MONITORING STATION

TAYLORTOWN – LINCOLN AVENUE
MOORE COUNTY PUBLIC WORKS DEPARTMENT

MOORE COUNTY, NORTH CAROLINA

LOCATION MAP

NORTH CAROLINA

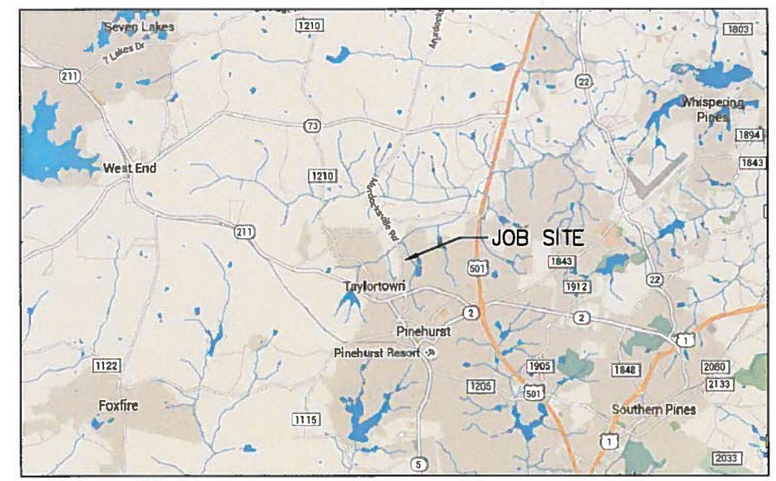

VICINITY MAP

SHEET INDEX

1. COVER SHEET
2. LINCOLN AVENUE PUMP STATION IMPROVEMENTS
3. DETAILS
4. DETAILS

E-1. ELECTRICAL

NORTH CAROLINA PROFESSIONAL SEAL 17651 ENGINEER BILL LESTER, JR.

1.11.16

LKC

Engineering
Landscape Architecture
Planning

LKC Engineering, pllc
140 Aqua Shed Court
Aberdeen, NC 28315
O: 910.420.1437
F: 910.637.0096
lkcengineering.com
License No. P-1095

L:\Town-16.01 Sewer Flow Meter\600 - Drawings\610 Design Drawings\06 Environmental\01 Taylortown flow meter Cover Sheet.dwg, Layout1, 1/11/2016 9:42:55 AM, Bill W. Lester (1 x 1?), 1:2

REVISIONS			
SYM.	DESCRIPTION	DATE	BY
	REVISED	1-11-16	DFW

CONSTRUCTION SEQUENCE

1. CONTRACTOR SHALL CONTACT MOORE CO. PUBLIC WORKS AND THE TOWN OF TAYLORTOWN PRIOR TO BEGINNING WORK.
2. COORDINATE TIMING WITH ALL PARTIES TO MINIMIZE DOWNTIME TO LESS THAN FOUR(4) HOURS.
3. CONTRACTOR SHALL COORDINATE AND INSTALL THE BYPASS PUMPING REQUIRED AND INCLUDE IN LUMP SUM PROJECT COST.
4. CONTRACTOR SHALL ASSEMBLE BYPASS PIPING ARRANGEMENT AS SHOWN AND EXCAVATE FOR INSTALLATION.
5. CONTRACTOR SHALL COORDINATE PIPE CUTTING AND REMOVE FORCE MAIN SECTION TO INSTALL BYPASS PIPING.
6. CONTRACTOR SHALL CLOSE VALVES TO ALLOW FLOW THROUGH THE NEW BYPASS PIPING.
7. CONTRACTOR SHALL INSTALL NEW FLOW METER VAULT AND ALL RELATED ACCESSORIES.
8. PERFORM START-UP OF ALL EQUIPMENT. CONTRACTOR SHALL SCHEDULE START-UP WITH MOORE COUNTY PUBLIC WORKS AND THE TOWN OF TAYLORTOWN.

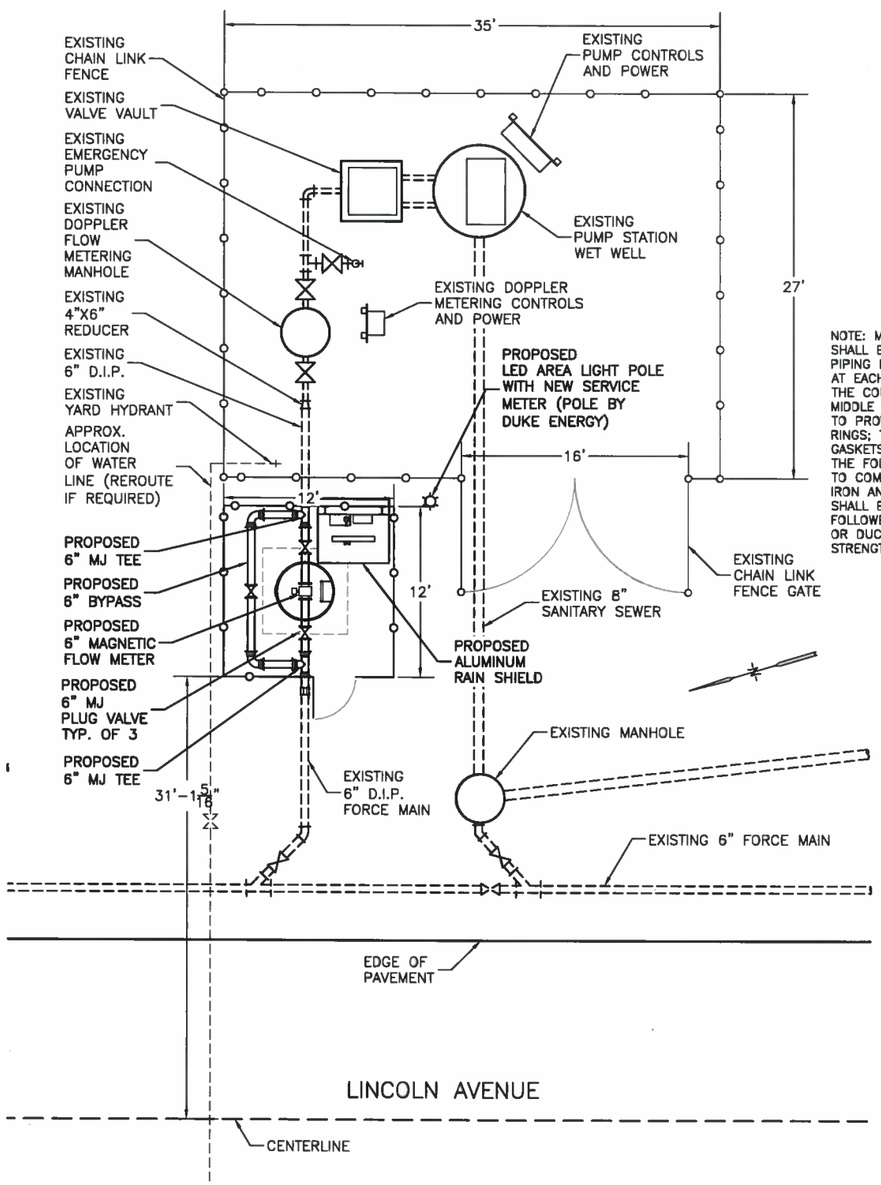

PUMP STATION SITE PLAN
SCALE: 3/16" = 1'-0"

NOTE: MECHANICAL JOINT SLEEVE COUPLING SHALL BE DESIGNED TO COUPLE PLAIN-END PIPING BY COMPRESSION OF A RING GASKET AT EACH END OF THE ADJOINING PIPE SECTIONS. THE COUPLING SHALL CONSIST OF ONE MIDDLE RING FLARED OR BEVELED AT EACH END TO PROVIDE A GASKET SEAT; TWO FOLLOWER RINGS; TWO RESILIENT TAPERED RUBBER GASKETS; AND BOLTS AND NUTS TO DRAW THE FOLLOWER RINGS TOWARD EACH OTHER TO COMPRESS THE GASKETS. FOR DUCTILE IRON AND PVC PLASTIC PIPE, THE MIDDLE RING SHALL BE OF CAST-IRON OR STEEL; AND THE FOLLOWER RINGS SHALL BE OF MALLEABLE OR DUCTILE IRON. STEEL SHALL HAVE A STRENGTH NOT LESS THAN THAT OF THE PIPE.

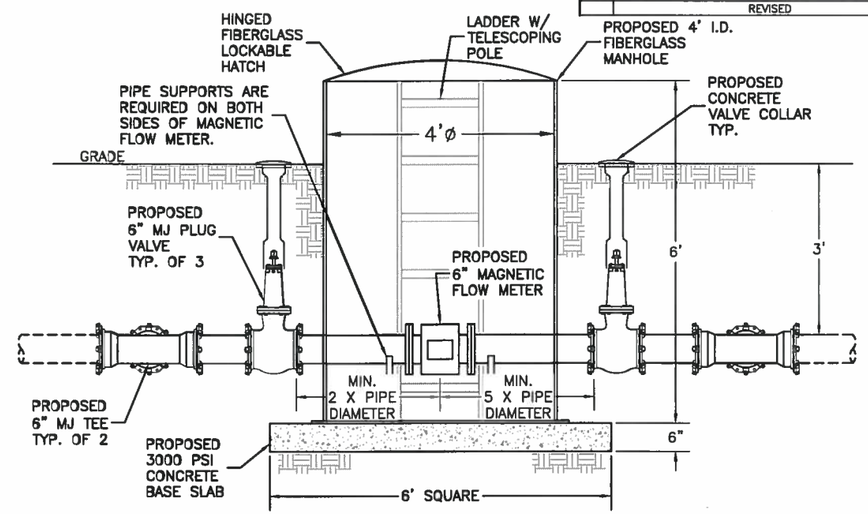

SECTION A-A
SCALE: 3/4" = 1'-0"

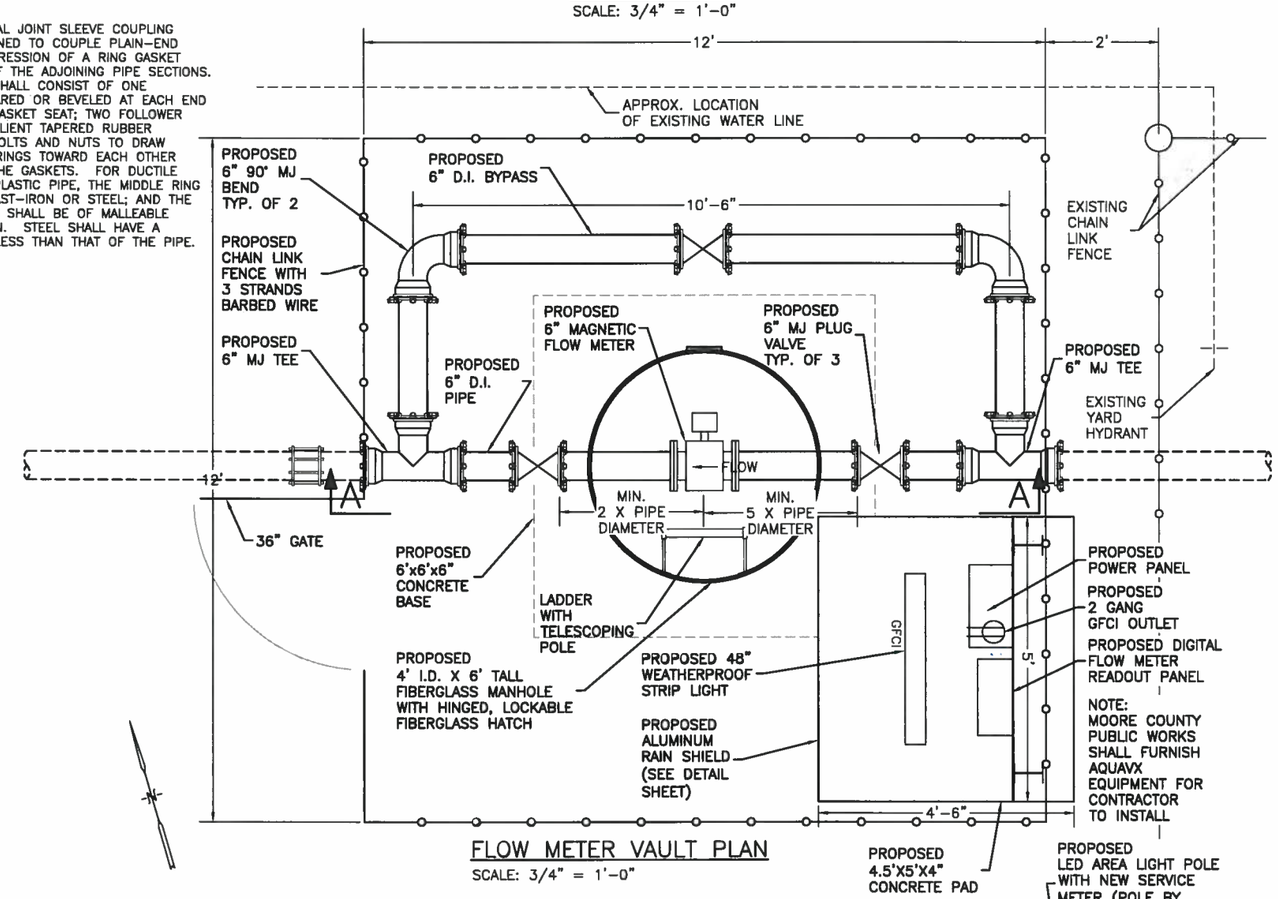

FLOW METER VAULT PLAN
SCALE: 3/4" = 1'-0"

NOTES: CONTRACTOR SHALL INSTALL MEGA-LUG PIPE RESTRAINTS ON EACH SIDE OF ALL PIPE FITTINGS AND VALVES.

ALL HARDWARE AND BOLTS SHALL BE STAINLESS STEEL.

VALVE LIDS SHALL SAY "SEWER".

LKC Engineering, pllc
140 Aqua Shed Court
Aberdeen, NC 28315
O: 910.420.1437
F: 910.637.0096
lkcengineering.com
License No. P-1095

Engineering
Landscape Architecture
Planning

LKC

LINCOLN AVE.
PUMP STATION
IMPROVEMENTS

FLOW MONITORING STATION
TAYLORTOWN-LINCOLN AVE.
MOORE COUNTY
PUBLIC WORKS DEPARTMENT
MOORE COUNTY, NORTH CAROLINA

DATE:	June 2015
DESIGNED:	BGL
DRAWN:	DFW
CHECKED:	BGL
NO.	2

L:\Them-16.01 Sewer Flow Meter\800 - Drawings\810 Design Drawings\06 Environmental\02 PUMP STATION SITE PLAN.dwg, Layout1, 1/11/2016 2:10:57 PM,
Dan W. Tabbald (11 x 17), 1:2

REVISIONS			
SYM.	DESCRIPTION	DATE	BY
	REVISED	1-11-16	DFW

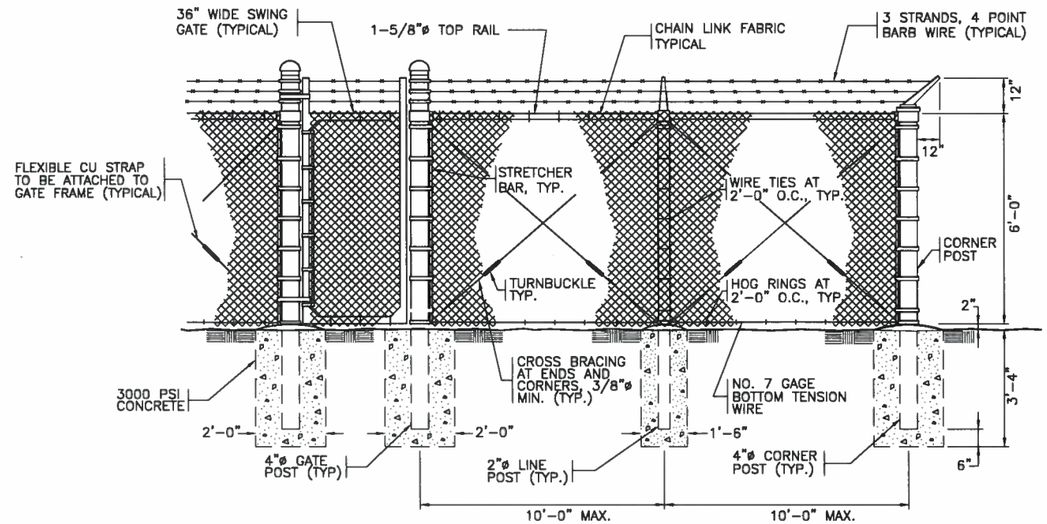

6' CHAIN LINK FENCE AND 36" SWING GATE DETAIL

N.T.S.

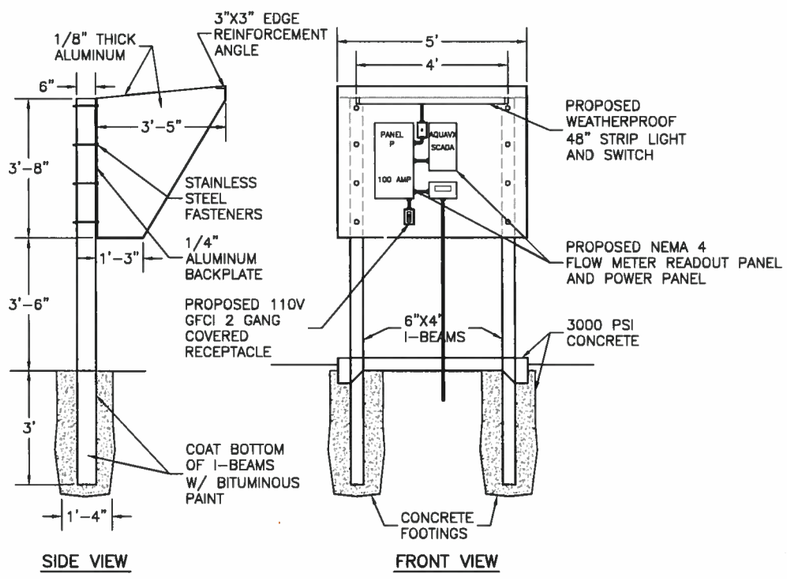

FLOW MONITORING RAIN SHIELD DETAIL

N.T.S.

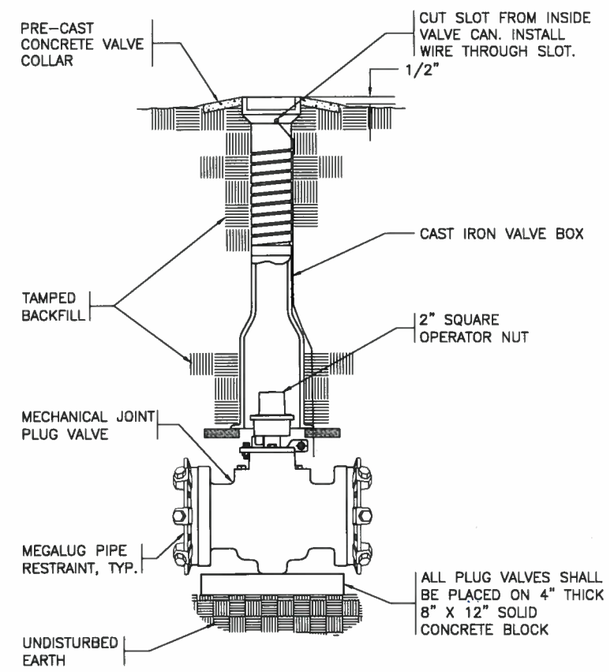

PLUG VALVE ASSEMBLY

N.T.S.

LKC Engineering, plic
140 Aqua Shed Court
Aberdeen, NC 28315
O: 910.420.1437
F: 910.637.0096
lkcengineering.com
License No. P-1095

Engineering
Landscape Architecture
Planning

LKC

DETAILS

FLOW MONITORING STATION
TAYLORTOWN-LINCOLN AVE.
MOORE COUNTY
PUBLIC WORKS DEPARTMENT
MOORE COUNTY, NORTH CAROLINA

DATE:	June 2015
DESIGNED:	BGL
DRAWN:	DFW
CHECKED:	BGL
NO.	3

LstTrans:15.51 Sewer Flow Meter\600 - Drawings\610 Design Drawings\06 Environmental\03 DETAILS.dwg, Layout1, 1/11/2016 1:52:09 PM,
Dan W.; 1:48646 (11 x 17), 1:2

REVISIONS			
SYM.	DESCRIPTION	DATE	BY
	REVISED	1-11-16	DFW

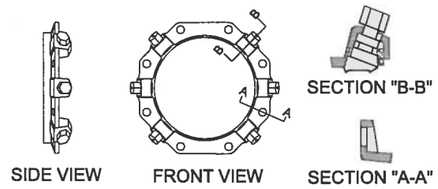

IRON RETAINING GLAND M.J. RESTRAINT			
NOMINAL PIPE SIZE	WEDGES QUANTITY	BOLTS QUANTITY	PRESS RATING
6"	3	6	350
8"	4	6	350
12"	8	8	350

NOTES:
1.) THRUST RESTRAINT SHALL BE INSTALLED ON DUCTILE IRON LINES 6" THRU 12" DIAMETER IN THE MANNER SHOWN.
2.) IRON RETAINING GLAND M.J. RESTRAINT OR OTHER FORMS OF IRON RESTRAINT SHALL NOT BE USED ON PVC PIPE.
3.) COMPACT FITTINGS ARE ACCEPTABLE FOR USE WITH IRON RETAINING GLAND M.J. RESTRAINT AND OTHER FORMS OF DI RESTRAINT.

PIPE RESTRAINT DETAIL
N.T.S.

NOTES:
1. UNDER VALVES, METERS OR OTHER SPECIAL APPURTENANCES A FABRICATED SUPPORT PIECE MAY BE UTILIZED AS ACCEPTABLE TO ENGINEER

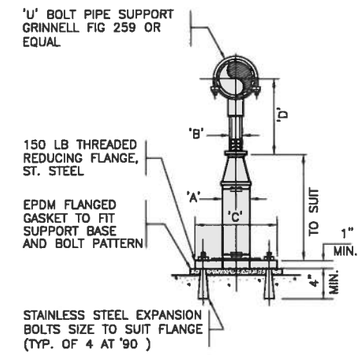

ADJUSTABLE PIPE AND APPURTENANCE SUPPORT
N.T.S.

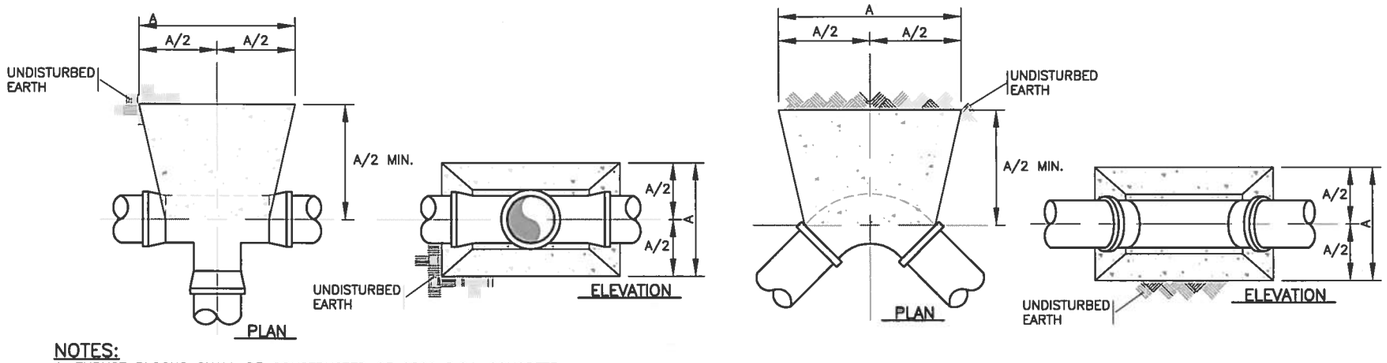

NOTES:
1. THRUST BLOCKS SHALL BE CONSTRUCTED OF 2500 P.S.I. CONCRETE
2. INSTALL TAR PAPER AROUND BEND OR FITTING TO PREVENT BONDING OF CONCRETE.
3. PRESSURE TEST AT 200 P.S.I.

DIMENSION A (FEET)									
BEND / FITTING	PIPE SIZE (NOM. DIA. IN INCHES)								
	4	6	8	10	12	16	18	20	24
90° BEND	1.4	2.0	2.7	3.4	4.0	5.4	6.0	6.7	8.0
45° BEND	1.0	1.5	2.0	2.5	3.0	4.0	4.5	5.0	5.9
22 1/2° BEND	0.8	1.1	1.5	1.8	2.2	2.9	3.2	3.6	4.3
11 1/4° BEND	0.5	0.8	1.0	1.3	1.5	2.0	2.3	2.5	3.0
TEE BRANCH/DEAD END	1.2	1.7	2.3	2.9	3.4	4.5	5.1	5.7	6.8

CONCRETE THRUST BLOCK DETAIL FOR PRESSURE MAIN HORIZONTAL BENDS AND TEES
N.T.S.

ADJUSTABLE PIPE SUPPORT APPROX DIMENSIONS IN INCHES					
PIPE SIZE	A	B	C	D MIN	D MAX
3	2-1/2	1-1/2	9	8-1/4	11-3/4
4	3	2-1/2	9	10-1/4	14
6	3	2-1/2	9	11-5/8	15-1/4
8	3	2-1/2	9	13-5/8	16-1/2
10	3	2-1/2	9	14-5/8	18-1/4
12	3	2-1/2	9	15-5/8	19-3/4
14	4	3	11	18-7/8	20-3/4
16	4	3	11	19-7/8	22-1/4
18	6	3-1/2	13-1/2	21-1/4	24
20	6	3-1/2	13-1/2	23-1/4	25-1/2
24	6	4	13-1/2	26-1/2	28-1/4

NORTH CAROLINA PROFESSIONAL SEAL 17651 ENGINEER BILL LESTER

LKC Engineering, pllc
140 Aqua Shed Court
Aberdeen, NC 28315
O: 910.420.1437
F: 910.637.0096
lkcengineering.com
License No. P-1095

LKC Engineering Landscape Architecture Planning

DETAILS

FLOW MONITORING STATION
TAYLORTOWN-LINCOLN AVE.
MOORE COUNTY
PUBLIC WORKS DEPARTMENT
MOORE COUNTY, NORTH CAROLINA

DATE:	June 2015
DESIGNED:	BGL
DRAWN:	DFW
CHECKED:	BGL
NO.	4

L:\Town-16.01 Sewer Flow Meter\800 - Drawings\810 Design Drawings\08 Environmental\04 DETAILS.dwg, Layout1, 1/11/2016 2:09:23 PM, Dan W, 1:8.0648 (11 x 17), 1:2

REVISIONS			
SYM.	DESCRIPTION	DATE	BY
	REVISED	1-11-16	DFW

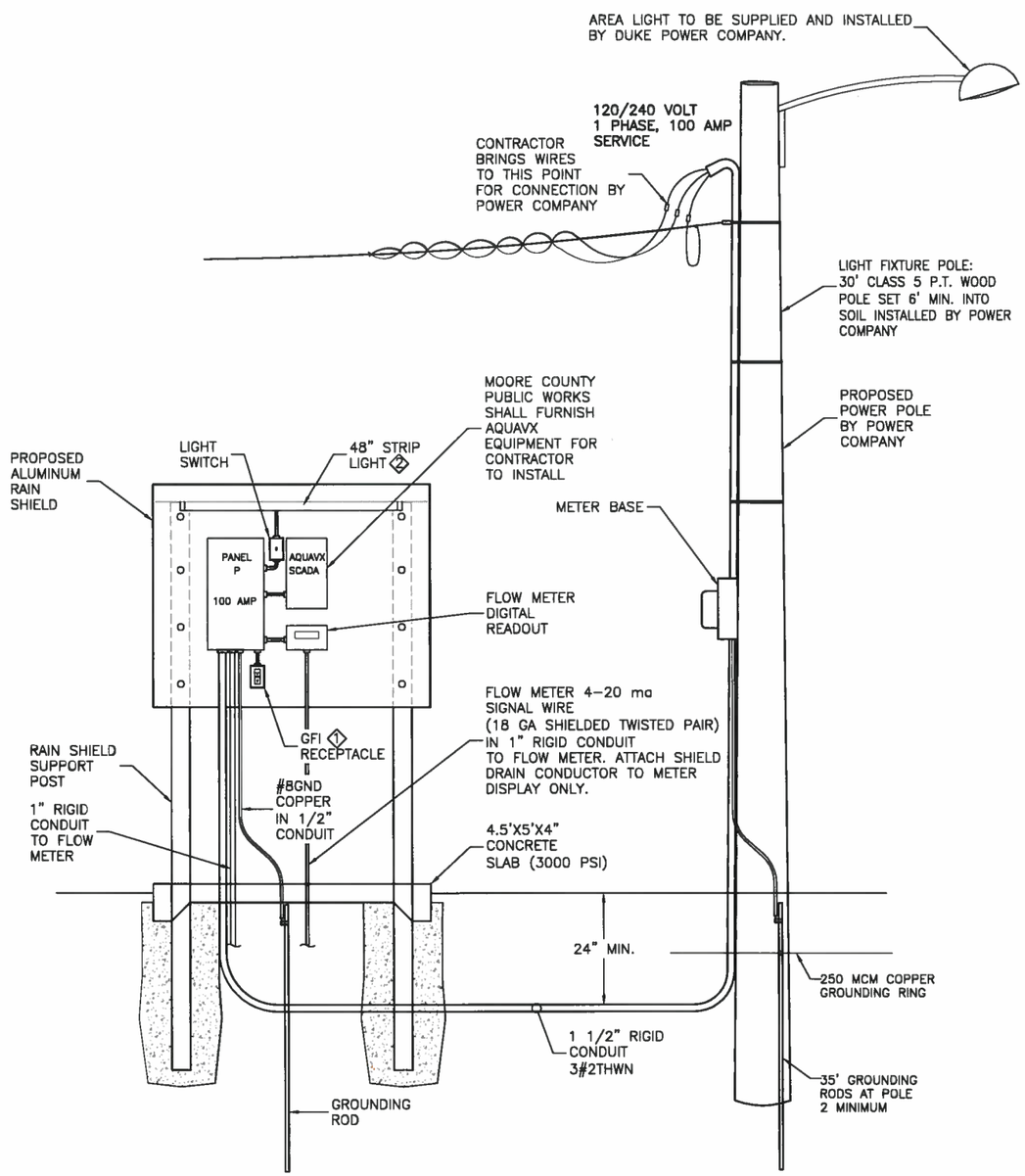

ELECTRICAL SERVICE DETAIL
NTS

PANEL P – 100 AMP, 120/240V, 18 CIRCUIT, SURFACE MOUNT, NEMA 4X ENCLOSURE, USE CONDUIT HUBS FOR CONNECTIONS.

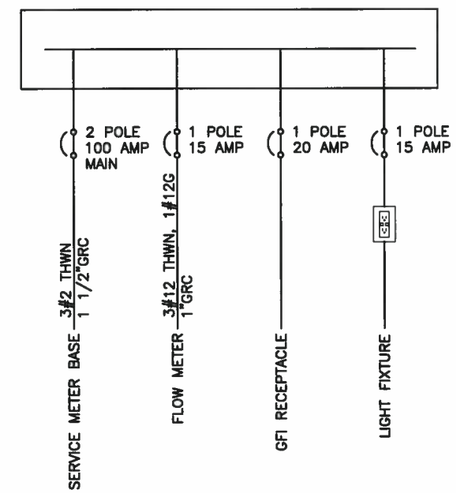

NOTES:
1. GFI DUPLEX RECEPTACLE, DIE-CAST SINGLE GANG BOX WITH DIECAST WHILE-IN-USE WEATHERPROOF COVER
2. LITHONIA XWMLED WET LOCATION LED STRIP LIGHT, SURFACE MOUNT.

ONE-LINE DIAGRAM
NTS

LKC Engineering, pllc
140 Aqua Shed Court
Aberdeen, NC 28315
O: 910.420.1437
F: 910.637.0096
lkcengineering.com
License No. P-1095

LKC Engineering Landscape Architecture Planning

NORTH CAROLINA PROFESSIONAL SEAL 17651 ENGINEER BILL LESTER, JR.

ELECTRICAL DETAILS

FLOW MONITORING STATION
TAYLORTOWN-LINCOLN AVE.
MOORE COUNTY
PUBLIC WORKS DEPARTMENT
MOORE COUNTY, NORTH CAROLINA

DATE:	June 2015
DESIGNED:	BGL
DRAWN:	DFW
CHECKED:	BGL
NO.	E-1

L:\Thorn-15.01 Sewer Flow Meter\000 - Drawings\010 Design Drawings\08 Electrical\E-1.dwg, Layout1, 1/11/2016 3:07:26 PM, Dan W, 1:60x42 (11 x 17), 1:2